V Fix™

Vinylester Resin based Chemical Anchoring System

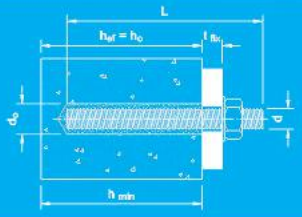

Seismic C1
Can be used in Seismic, cracked & un cracked concrete

Hard Plastic Body
Protects from transportation damages & material handling

Air Tight Cap
Stop-n-go use for repeated Applications

ÉMISSIONS DANS L'AIR INTÉRIEUR* A+ A+ A B C

FIRE RESISTANCE F120

LEED tested

C1 SEISMIC

ETA CE European Technical Assesment ETA-14/0211 Post installed rebar

ETA CE European Technical Assesment ETA-14/0208 Option 1

CIVIL-AID MT:AG/1/924(b)

Quality Solutions For Rebar & Anchoring Applications

www.rippleindia.in

ripple India™

V Fix™

Styrene Free Vinylester Chemical Anchoring System

Available in
410 ml Coaxial Cartridge 10:1 ratio
Seismic C1 for Seismic Zones, Cracked & Un cracked.

ÉMISSIONS DANS L'AIR INTÉRIEUR A+ A B C

LEED tested

FIRE RESISTANCE F120

European Technical Assesment ETA-14/0211 Post installed rebar

European Technical Assesment ETA-14/0208 Option 1

C1 SEISMIC

CIVIL-AID MT.AG/192406

SEISMIC C1
Can be used in Seismic Zones, Un Cracked & Cracked Concrete

HARD PLASTIC BODY
Protects from transportation damages & material handling

AIR TIGHT CAP
Stop-n-go Applications for repeated usage

Applications

- Rebar Fixings
- Steel & wooden structural Beams & columns
- Cantilevers, Pipe supports
- Pumps, Machines
- Guard rails, Gates
- Heavy duty ladders
- Mechanical Equipments
- Heavy Duty Fixings
- Percussion / Rotary Hammer drilled holes
- Overhead Applications

410 ml

Ripple V Fix is a Vinylester based chemical anchor is designed specially for the Construction Industry. Few applications of **V Fix** including anchoring of threaded rods, reinforcing bars or internal threaded rod sleeves into concrete (normal, porous & light) as well as solid masonry.

Ripple V Fix being Vinylester based resin mortar is used in hammer drilled holes and are suitable for extreme loads. The system is based on adhesion principle. The resulting bond is stronger to the base material, no additional load stress is imparted to the base material in comparision with expansion type anchors and are therefore ideal for close to edge fixing, reduced center, group anchoring.

Installation Temperature of **Ripple V Fix** from -10°C and a service Temperature up to 120°C. **V Fix** has high chemical resistance and is suitable for applications in extreme ambiences e.g. in swimming pools (chlorine) or closeness to the sea (salt). The product is supported with several international approvals which prove it's capability in nearly every application.

Approvals

- EOTA assessment acc. to TR 029 (Bonded anchors) Option 1: ETA-14/0208
- EOTA assessment acc. to TR 023 (Post Installed Rebar) : ETA-14/0211
- Tested and Certified by CIVIL AID, Bureau Veritas India
- VOC Limits for Multipurpose construction adhesive as per LEED.
- Cured V Fix Mortar is water - impermeable in accordance with DIN EN 12390-8
- ETA with Post Installed rebar upto 32 mm diameter.

Handling and Storage:
- Storage: Store in cold and dark place
- Storage Temperature: from +5°C up to+25°C
- **Shelf life:18** months from the date of manufacturing, when stored under 25°C
- Avoid direct sunlight

Properties of V Fix

Properties	Test Method	Result
UV Resistance		Pass
Water tightness	DIN EN 12390 - 8	0 mm
Temperature Stability		120°C
pH Value		> 12
Density		1.77 gms/cm³
Compressive Strength	EN 196 Teil1	100 N/mm²
Flexural Strength	EN 196 Teil1	15 N/mm²
E-Modulus	EN 196 Teil1	14,000 N/mm²
Shrinkage		< 0.3 %
Hardness Shore D		90
Electrical Resistance	IEC 93	3.610⁹ Ωm
Thermal Conductivity	IEC 60093	0.65W/m.K

Reaction Behaviour

Base Material	Gelling & Working	Full Curing Time
Temperature	Time	Dry Base
°C(Celsius)	Minutes	Minutes
≥ -10°C	90 Min	1440 Min
≥ -5°C	90 Min	840 Min
≥ 0°C	45 Min	420 Min
≥ 5°C	25 Min	120 Min
≥ 10°C	15 Min	80 Min
≥ 20°C	6 Min	45 Min
≥ 30°C	4 Min	25 Min
≥ 35°C	2 Min	20 Min
≥ 40°C	1.5 Min	15 Min

Cartridge Temperature must be maintained between min + 15°C and max + 25°C

Installation Procedure

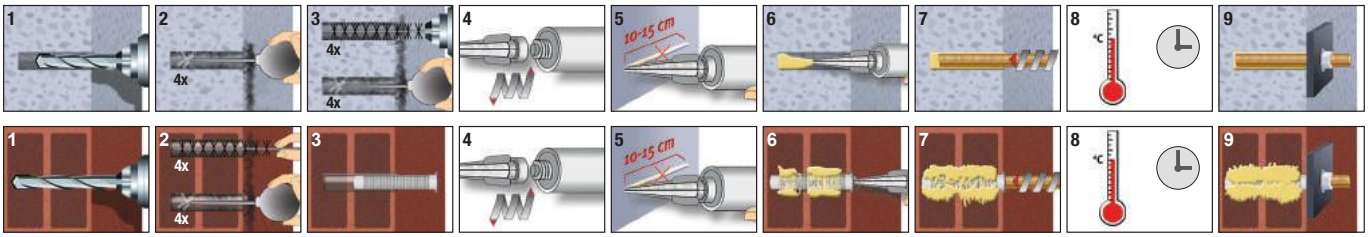

** While using chemical anchoring system, generally there will be a small percentage of wastage depending on the site conditions, the applicator technique, surface / application temperatures etc. Wastage factor (%) including initial quantities dispensed till achieving uniform mix, the unused portion of adhesive in the cartridge and nozzle after use and any adhesive displaced at the top of the drilled hole when the anchor element is inserted.

1) Press the dispenser trigger firmly till achieve a uniform beed of the mixed mortar.
2) Fill the drilled hole with the mixed mortar only 2/3rd of the hole depth.
3) Fix the Anchor / Rebar into the hole by rotating clockwise direction to avoid air entrapment.
4) While driving the anchor / rebar into the hole, the mixed mortar will be coming out to the surface.
5) Smoothen the edges to remove excess mixed mortar and allow the installed mortar to cure
6) There is a possibility of oozing out some small liquid while removing the cap on the cartridge. This is absolutely normal.

ripple™ India

V Fix™

Styrene Free Vinylester Chemical Anchoring System

FEATURES

- Fast Setting & Curing
- Heavy Duty Vinylester Chemical Anchor
- Vinylester Based Chemical
- Suitability- Base Materials
- Styrene free Chemical
- High Chemical Resistance
- Thixotropic
- ETA Option 1 Certification

ADVANTAGES

- Suitable for winter, cold application
- High loads & safe Chemical anchoring
- Excellent Bonding & low shrinkage
- Wide range of construction Base Material
- Low odour, Low emissions
- Resists to most industrial chemicals
- Suitable for Overhead applications
- Reliable fixing in Cracked & Un-cracked concrete

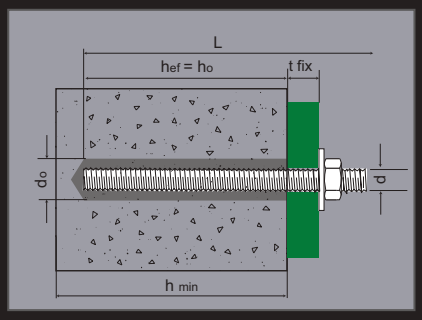

Base Materials

- Concrete
- Cracked Concrete
- Solid Brick
- Light Weight Honeycomb Brick
- Hollow Dense Aggregate Brick
- Hollow Light Aggregate Brick
- Solid Stone
- Wood
- Aerated concrete

d	=	threaded bar diameter	h_{ef}	=	effective embedment depth	t_{fix}	=	fastenable thickness	h_o	=	minimum hole depth
d_o	=	hole diameter	L	=	threaded bar length	T_{inst}	=	torque	h_{min}	=	minimum support thickness

Installation Parameters - Anchor Rods (Threaded bars)

Design Method acc. to EOTA Technical Report TR 029, characteristic values for Tension & Shear Loading

Anchor size			M8	M10	M12	M16	M20	M24	M27	M30
Edge distance	$C_{cr,N}$	[mm]	92	126	152	188	253	291	312	329
Min. edge distance	C_{min}	[mm]	40	50	60	80	100	120	135	150
Axial distance	$S_{cr,N}$	[mm]	184	252	304	376	506	582	624	658
Min. axial distance	S_{min}	[mm]	40	50	60	80	100	120	135	150
Embedment Depth	h_{ef}	[mm]	80	90	110	125	170	210	250	280
Min. part thickness	h_{min}	[mm]	h_{ef} + 30 mm ≥ 100 mm			$h_{ef} + 2d_o$				
Anchor diameter	d	[Nm]	8	10	12	16	20	24	27	30
Drill diameter	d_o	[Nm]	10	12	14	18	24	28	32	35
Installation torque	$T_{inst.}$	[Nm]	10	20	40	60	120	150	200	250

The recommended loads are only valid for single anchor for a roughly design, if the following conditions are valid:

$c \geq c_{cr,N}$ $s \geq s_{cr,N}$ $h \geq 2 \times h_{ef}$

If the conditions are not fulfilled the loads must be calculated acc. to EOTA Technical Report TR 029.

The safety factors are already included in the recommended loads.

Anchor Rods (Threaded Bars) — Recommended Loads - Threaded Bars in Concrete (C20/25)

Design Method acc. to EOTA Technical Report TR 029, characteristic values for Tension & Shear Loading

Anchor size					M8	M10	M12	M16	M20	M24	M27	M30
Tension Load	40°C/24°C	Un-cracked Concrete	$N_{Rec,\ stat}$	[KN]	8.6	13.5	19.7	28.0	44.4	61.0	79.2	88.9
	40°C/24°C	Cracked Concrete	$N_{Rec,\ stat}$	[KN]	4.3	6.2	9.1	13.7	23.3	34.6	54.7	63.4
	40°C/24°C	Cracked Concrete	$N_{Rec,\ seis}$	[KN]	2.9	4.2	6.2	9.3	15.9	23.8	37.7	45.3
Shear Load(2)		Un-cracked Concrete	$V_{Rec,\ stat}$	[KN]	5.1	8.6	12.0	22.3	34.9	50.3	59.3	65.5
Shear Load(2)		Cracked Concrete	$V_{Rec,\ stat}$	[KN]	3.3	5.6	7.5	12.3	18.0	23.7	31.9	37.8
Shear Load(2)		Cracked Concrete	$V_{Rec,\ seis}$	[KN]	1.7	2.8	3.8	6.1	9.0	11.9	16.0	18.9
Embedment Depth			h_{ef}	[mm]	80	90	110	125	170	210	250	270
Edge Distance			$C_{cr,\ N}$	[mm]	92	126	152	188	253	291	312	329
Axial Distance			$S_{cr,\ N}$	[mm]	$2XC_{cr,\ N}$							

1) Sizes 8 and 10 (cracked concrete only), are not covered by ETA's.

2) Shear load with lever arm acc. TR 029.

3) Short term temperature/ Long term temperature

$N_{Rec,stat}$, $V_{Rec,stat}$ = Recommended Load under static and quasi-static action,

$N_{Rec,seis}$, $V_{Rec,seis}$ = Recommended Load under seismic action

ripple™ India

V Fix™

Styrene Free Vinylester Chemical Anchoring System

Installation Parameters - Reinforcement Bars (Rebars) (Bonded Anchors)

Reinforcement bars (Rebars)			Setting Details - Rebars							
Rebar size		mm	Ø 8	Ø 10	Ø 12	Ø 16	Ø 20	Ø 25	Ø 28	Ø 32
Nominal drill hole diameter	d_0	mm =	12	14	16	20	24	32	35	40
Minimum anchorage depth	$l_{b,\,min}$	mm =	100	100	120	160	200	250	280	320
Development Length	l_{bd}	mm =	400	500	600	800	1000	1250	1400	1600
Diameter of Nylon brush	d_b	mm ≥	14	16	18	22	26	34	37	41.5
Minimum spacing	s_{min}	mm	40	50	60	80	100	125	140	160
Minimum Edge Distance	c_{min}	mm	40	50	60	80	100	125	140	160

*The values of development length are rounded off to 50D.

Performance Data - Reinforcement Bars (Rebars) 8 mm to 20 mm Ø

PERFORMANCE DATA - Reinforcement Bars Fe500

Rebar Diameter (mm)	Hole Diameter (mm)	Design Load for good bond condition, M25 (KN)																
Ø8	Ø 12	14.0	15.4	16.8	19.6	21.9												
Ø10	Ø 14	21.0	23.1	25.2	29.4	32.6	33.6	34.2										
Ø12	Ø 16			30.3	35.3	39.1	40.4	41.6	49.2									
Ø14	Ø 18				41.2	45.6	47.1	48.6	57.4	58.9	67.0							
Ø16	Ø 20						53.8	55.5	65.6	67.3	75.7	84.1	87.5					
Ø20	Ø 28									72.1	81.1	90.1	93.7	100.9	108.1	115.3	126.1	136.7
Depth (mm)		100	110	120	140	155	160	165	195	200	225	250	260	280	300	320	350	380

Performance Data - Reinforcement Bars (Rebars) 25 mm to 32 mm Ø

PERFORMANCE DATA - Reinforcement Bars Fe500

Rebar Diameter (mm)	Hole Diameter (mm)	Design load for good bond condition in Concrete (C20/25) f_{ck}, cube = 25 N/mm² [$N_{b,d}$] (KN)																
Ø25	Ø 32	103.2	107.4	115.6	123.9	132.2	144.5	165.2	185.8	206.5	213.6							
Ø28	Ø 35			117.7	126.1	134.6	147.2	168.2	189.2	210.2	218.7	231.3	252.3	268.0				
Ø32	Ø 40					130.7	143.0	163.4	183.8	204.2	212.4	224.7	245.1	261.4	285.9	306.4	326.8	349.0
Depth (mm)		250	260	280	300	320	350	400	450	500	520	550	600	640	700	750	800	855

ripple™ India

V Fix™

Styrene Free Vinylester Chemical Anchoring System

Performance Data - Reinforcement Bars[1] (Rebars) for Reinforced Concrete

Design Method acc. to EOTA Technical Report TR 029, characteristic values for Tension & Shear Loading

Rebar size				Ø 8	Ø 10	Ø 12	Ø 14	Ø 16	Ø 20	Ø 25	Ø 28	Ø 32
Steel Failure												
Characteristic Tension reistance, BSt 500 S acc. to DIN 488-2:1986 or E DIN 488-2006[2]		$N_{Rk,s}$	[KN]	28	43	62	85	111	173	270	339	442
Partial Safety Factor		$\gamma_{Ms,N}$					1.87				2.86	
Pullout and Concrete cone failure[3]												
Characteristic bond resistance in concrete (C20/25) f_{ck}, cube = 25 N/mm²												
40°C/24°C[3]	Un-cracked Concrete	$N_{Rk,p}$ = $N^0_{Rk,c}$	[kN]	20.1	33.9	49.8	60.7	75.4	128	181	220	231
	Cracked Concrete			9.0	15.6	22.8	27.8	34.6	58.7	90.7	143	176
80°C/50°C[3]	Un-cracked Concrete			15.1	25.4	37.3	45.5	56.5	96.1	132	154	163
	Cracked Concrete			6.0	11.3	16.6	20.2	25.1	42.7	66.0	99.0	122
120°C/72°C[3]	Un-cracked Concrete			11.1	18.4	27.0	32.9	40.8	69.4	99.0	110	122
	Cracked Concrete			5.0	8.5	12.4	15.2	18.8	32.0	49.5	77.0	95.0
Partial Safety Factor		$\gamma_{Mp}=\gamma_{Mc}$		1.5				1.8				
Embedment Depth		h_{ef}	[mm]	80	90	110	115	125	170	210	250	270
Edge Distance		$C_{cr,N}$	[mm]	92	126	152	173	188	253	303	323	341
Axial Distance		$S_{cr,N}$	[mm]					$2XC_{cr,N}$				
Increasing factors for non-concrete Ψ_c								$(f_{ck}^{0.11})/1.42$				
Splitting Failure												
Edge Distance		$C_{cr,sp}$	[mm]				$C_{cr,N} \leq 2\,h_{ef}(2.5 - h/h_{ef}) \leq 2.4\,h_{ef}$					
Axial Distance		$S_{cr,sp}$	[mm]					$2XC_{cr,sp}$				
Partial Safety Factor		γ_{Msp}		1.5				1.8				
Steel Failure without lever arm												
Characteristic Shear resistance, BSt 500 S acc. to DIN 488-2:1986 or E DIN 488-2006[2]		$V_{Rk,s}$	[kN]	14	22	31	42	55	86	135	169	221
Partial Safety Factor		$\gamma_{Ms,v}$						1.5				
Steel Failure with lever arm												
Characteristic Bending moment, BSt 500 S acc. to DIN 488-2:1986 or E DIN 488-2006[4]		$M^\circ_{Rk,s}$	[kNm]	33	65	112	178	265	518	1012	1422	2123
Partial Safety Factor		$\gamma_{Ms,v}$						1.5				
Concrete Pry out failure												
Factor k in equation (5.7) of TR 029								2.0				
Partial Safety Factor		γ_{Mcp}						1.5				
Concrete Edge Failure												
Partial Safety Factor		γ_{Mc}						1.5				

The data in this table is intended to be used together with the design provisions of EOTA Technical Report TR 029.

(1) For more details as well as values in water filled concrete, see ETA-14/0208

(2) For reinforcing bars which do not comply with DIN 488:The characteristic resistance $N_{Rk,s}$ shall be determined acc.Technical Report TR 029, equation (5.1) & the characteristic resistance $V_{Rk,s}$ shall be determined acc. to Technical Report TR 029, equation (5.5)

(3) Shall be determined acc. to this table or to TR 029 The smaller value is decisive

(4) For reinforcing bars which do not comply with DIN 488: the characterstic resistance M°_{Rk},s shall be determined acc.to Technical Report TR 029, equation (5.5b)

ripple™ India

Consumption Guide - Threaded Rods (Bonded Anchor)

****Consumption Guide for V Fix for estimation purpose**

Anchor Ø (mm)	Hole Ø (mm)	Volume of Mortar per Hole (ml)*																						
M8	Ø 10	1.8	2.2	2.5	2.8	3.0	3.1	3.3	3.7	4.6	4.9													
M10	Ø 12	2.3	2.6	3.0	3.4	3.6	3.8	4.1	4.5	5.7	6.0	7.5												
M12	Ø 14	2.7	3.1	3.6	4.0	4.3	4.5	4.8	5.3	6.7	7.1	8.9	10.7											
M16	Ø 18	3.5	4.1	4.7	5.2	5.6	5.8	6.3	7.0	8.7	9.3	11.6	14.0	14.6	17.5	18.6								
M20	Ø 24	9.0	10.6	12.1	13.6	14.5	15.1	16.3	18.1	22.6	24.1	30.1	36.2	37.7	45.2	48.2	52.8	60.3						
M24	Ø 28	10.7	12.5	14.3	16.0	17.1	17.8	19.2	21.4	26.7	28.5	35.6	42.8	44.5	53.4	57.0	62.3	71.3	80.2	85.5				
M27	Ø 32	15.2	17.7	20.2	22.7	24.3	25.3	27.3	30.3	37.9	40.4	50.5	60.6	63.2	75.8	80.8	88.4	101.1	113.7	121.3	126.3	136.4		
M30	Ø 35	16.7	19.5	22.3	25.1	26.7	27.8	30.1	33.4	41.8	44.5	55.7	66.8	69.6	83.5	89.1	97.4	111.3	125.3	133.6	139.2	150.3	153.1	167.0
Hole Depth (mm)		**60**	**70**	**80**	**90**	**96**	**100**	**108**	**120**	**150**	**160**	**200**	**240**	**250**	**300**	**320**	**350**	**400**	**450**	**480**	**500**	**540**	**550**	**600**

Note: 1) Theoretical Calculations for Chemical Consumption is done by using the formula $(\Pi(d_0^2-d^2)*h)/4)$. The actual chemical consumption can be obtained by multiplying the Wastage percentage to this chemical consumption.
2) 1ml = 1000mm^3.

Consumption Guide - Reinforcement Bars (Rebars)

****Consumption Guide for V Fix for estimation purpose**

Rebar Ø (mm)	Hole Ø (mm)	Volume of Mortar per Hole (ml)*																			
Ø 8	Ø 12	3.1	3.7	4.3	4.9	5.1	5.5	6.2	6.3	7.6	7.7	8.6	9.2								
Ø 10	Ø 14	8.2	9.9	11.5	13.2	13.6	14.8	16.4	16.9	20.1	20.6	23.0	24.7	26.3	27.1	28.8					
Ø 12	Ø 16	9.6	11.5	13.4	15.3	15.8	17.3	19.2	19.7	23.5	24.0	26.9	28.8	30.7	31.7	33.6	38.4				
Ø 16	Ø 22	19.5	23.4	27.3	31.2	32.2	35.1	39.1	40.0	47.8	48.8	54.7	58.6	62.5	64.4	68.3	78.1	80.1	97.6		
Ø 20	Ø 28	32.9	39.5	46.0	52.6	54.3	59.2	65.8	67.4	80.6	82.2	92.1	98.7	105.2	108.5	115.1	131.5	134.8	164.4	180.9	197.3
Ø 25	Ø 32	34.2	41.0	47.8	54.7	56.4	61.5	68.3	70.1	83.7	85.4	95.7	102.5	109.3	112.8	119.6	136.7	140.1	170.9	187.9	205.0
Ø 28	Ø 35	37.8	45.3	52.9	60.4	62.3	68.0	75.5	77.4	92.5	94.4	105.8	113.3	120.9	124.6	132.2	151.1	154.9	188.8	207.7	226.6
Ø 32	Ø 40	49.3	59.2	69.1	78.9	81.4	88.8	98.7	101.1	120.9	123.3	138.1	148.0	157.9	162.8	172.7	197.3	202.3	246.7	271.3	296.0
Hole Depth (mm)		**100**	**120**	**140**	**160**	**165**	**180**	**200**	**205**	**245**	**250**	**280**	**300**	**320**	**330**	**350**	**400**	**410**	**500**	**550**	**600**

* The above consumption data is calculated theoretically and for estimation purpose only.
* Actual Consumption may vary upto 10-15% depending on site conditions and type of application.
** Please refer to page no. 2 of this brochure under installation procedure

Accessories

Dispenser Gun for V Fix (Suitable for Ripple V Fix, Ripple P Fix and Ripple P Fix SG Coaxial 10:1 ratio cartridge)	30205	
Blow out Pump - Manual (Medium)	16007	
Cleaning Nylon Brush (Various Diameters available)	-	
Threaded bars (RTR) available in various diameters & lengths in 5.8, 8.8 grades & also in A2 (304) & A4 (316)	-	

RC2-v3.0 @ Nov 2017

New Delhi | Mumbai | Pune | Kolkata | Bangalore | Chennai
Lucknow | Ahmedabad | Nagpur | Patna | Bhubaneswar | Kochi

Ripple Construction Products Pvt Ltd
Corp Office: 303 & 403, Royal Arcadia, S.R. Nagar, Hyderabad - 500 038, India
Tel: +91 40 4004 0707 Fax: +91 40 4004 0686
Email: marketing@rippleindia.in | www.rippleindia.in

ANDROID APP ON Google play

Ripple Injection Chemical Estimator