# technical catalogue

# friulsider

Friulsider S.p.A, established in 1966, has expanded rapidly over the years and now occupies an area of 61.000 m² (23.000 m² under cover) made up of various offices, warehouses and production area.

The Friulsider production plant is able to satisfy the market needs while guaranteeing a first class and constant level of quality.

Friulsider continuously expands and evolves its product range to respond to any fixing requirement in areas ranging from the building trade to plant engineering, from the mechanical industry to light or heavy carpentry while constantly searching for innovative technical solutions.

The Management Quality System ISO 9001 and the Environmental Management System ISO 14001 entails a constant and systematic control of all the company's activities from the receiving of orders to the post sales technical support.

Friulsider's R&D department is equipped with a sophisticated "Test Laboratory" where testing is carried out at all stages from raw materials to finished products.

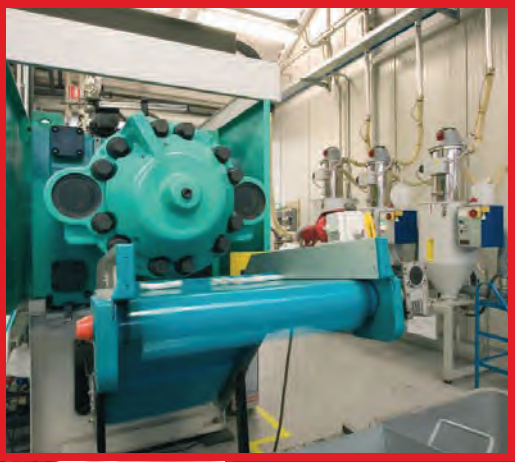

A logistics organisation of great importance is always based on complete client satisfaction.
Our sophisticated computing system ensures that orders are processed rapidly as well as carrying out an accurate management of warehouse stock.

friulsider

| Product | Page | Certifications | |
|---|---|---|---|
| **ATS-evo** | 2 | ETAG 001 | ETA 10/0423 op.1 |
| **FM-753® CRACK** | 4 | ETAG 001<br>ETAG 001 | ETA 09/0056 op.1<br>ETA 10/0293 op.1 |
| **FM-753®** | 6 | ETAG 001<br>ETAG 001<br>ETAG 001 | ETA 01/0014 op.7<br>ETA 01/0009 op.7<br>ETA 13/0367 op.7 |
| **FM-MP3®evo** | 8 | ETAG 001<br>ETAG 001 part 6<br>ETAG 001<br>ETAG 001 part 6 | ETA 09/0067 op.7<br>ETA 10/0074<br>ETA 09/0357 op.7<br>ETA 10/0093 |
| **TAP** | 10 | | |
| **KEM-UP EPOXY** Pure epoxy | 12 | ETAG 001<br>ETAG 001<br>TR 023 | ETA 09/0061 op.1<br>ETA 12/0602 op.7 Diamond<br>ETA 12/0542 |
| **KEM-UP VINYLESTER** Styrene free vinylester resin | 13 | ETAG 001<br>ETAG 029<br>TR 023 | ETA 08/0383 op.1<br>ETA 12/0543<br>ETA 12/0553 |
| **KEM-UP POLYESTER** PROFESSIONAL CE CERTIFIED | 14 | ETAG 001<br>ETAG 029 | ETA 12/0608 op.7<br>ETA 12/0534 |
| **KEM-UP POLYESTER** PROFESSIONAL | 14 | | |
| **KEM-UP POLYESTER** ALL-PURPOSE | 14 | | |
| **KEM-UP** Guns and accessories | 16 | | |
| **FRP** | 18 | ETAG 001 | ETA 11/0155 |
| **PUR** | 20 | | |
| **FM-CLK** | 22 | | |
| **FM-X5®** | 24 | ETAG 020 | ETA 10/0425 |
| **FM-X5® TOP** | 28 | | |
| **FM-X5®s** | 30 | | |
| **TUPP** | 32 | | |
| **TUP4** | 34 | | |
| **X1** | 36 | | |
| **FM-XP** | 38 | | |
| **TMT** | 40 | | |
| **TU** | 42 | | |
| **TSS** | 44 | ETAG 014 | ETA 10/0190 |
| **TBB** | 46 | ETAG 014 | ETA 10/0190 |
| **TPP** | 48 | ETAG 014 | ETA 10/0190 |
| **FM-ISOMAX** | 50 | ETAG 014 | ETA 08/0094 |
| **FM-ISOTHERM** | 52 | ETAG 014 | ETA 11/0254 |
| **FM-ISOMETAL** | 54 | | |
| **DRILLNOX TH 1** | 57 | | |
| **DRILLNOX HP 3** | 57 | | |
| **DRILLNOX TH 3** | 58 | | |
| **DRILLNOX TH 6** | 58 | | ETA 10/0181 |
| **DRILLNOX TH 12** | 59 | | ETA 10/0181 |
| **DRILLNOX DF 4** | 59 | | |
| **DRILLNOX DF 12** | 60 | | |
| **ISODRILL TH DF** | 60 | ETAG 006 | ETA 08/0239 |
| **ISODRILL TT** | 61 | ETAG 006 | ETA 08/0239 |
| **DRILLNOX WOOD DF** | 61 | | |


# MORE THAN 1.500 CODES CE CERTIFIED IN FRIULSIDERS COMPLETE PRODUCT RANGE

For further information please contact:
**export@friulsider.com**

Declaration of Performance area on web:
**www.friulsider.com/dop**

# OPTION 1
# Heavy duty safety bolt for cracked concrete

ETA 10/0423 - op. 1

FIRE RESISTANCE F120

**ANTIROTATION**
**The special bush shape prevents rotation**

**SAFE INSTALLATION**
**Optimal expansion guaranteed by the coupling of the cone and body**



**UNIFORM EXPANSION**
**Single piece three expanding segments**

## ATS-evo S

**Hex head screw grade 8.8**
**White zinc plated**

| Code | do/tfix-d | L mm | tfix mm | df mm | sw | Pkg. |
|---|---|---|---|---|---|---|
| 79302b10070 | 10/10-M6 | 70 | 10 | 12 | 10 | 50 |
| 79302b10080 | 10/20-M6 | 80 | 20 | 12 | 10 | 50 |
| 79302b10110 | 10/50-M6 | 110 | 50 | 12 | 10 | 50 |
| 79302b12080 | 12/10-M8 | 80 | 10 | 14 | 13 | 25 |
| 79302b12090 | 12/20-M8 | 90 | 20 | 14 | 13 | 25 |
| 79302b12120 | 12/50-M8 | 120 | 50 | 14 | 13 | 25 |
| 79302b15090 | 15/10-M10 | 90 | 10 | 17 | 17 | 20 |
| 79302b15100 | 15/20-M10 | 100 | 20 | 17 | 17 | 20 |
| 79302b15130 | 15/50-M10 | 130 | 50 | 17 | 17 | 20 |
| 79302b15180 | 15/100-M10 | 180 | 100 | 17 | 17 | 20 |
| 79302b18110 | 18/10-M12 | 110 | 10 | 20 | 19 | 20 |
| 79302b18125 | 18/25-M12 | 125 | 25 | 20 | 19 | 20 |
| 79302b18150 | 18/50-M12 | 150 | 50 | 20 | 19 | 20 |
| 79302b18200 | 18/100-M12 | 200 | 100 | 20 | 19 | 20 |
| 79302b24125 | 24/10-M16 | 125 | 10 | 26 | 24 | 10 |
| 79302b24140 | 24/25-M16 | 140 | 25 | 26 | 24 | 10 |
| 79302b24165 | 24/50-M16 | 165 | 50 | 26 | 24 | 10 |
| 79302b24215 | 24/100-M16 | 215 | 100 | 26 | 24 | 10 |

## ATS-evo B

**Threaded bar grade 8.8**
**Hex nut grade 8**
**White zinc plated**

| Code | do/tfix-d | L mm | tfix mm | df mm | sw | Pkg. |
|---|---|---|---|---|---|---|
| 79402b10070 | 10/10-M6 | 70 | 10 | 12 | 10 | 50 |
| 79402b10080 | 10/20-M6 | 80 | 20 | 12 | 10 | 50 |
| 79402b10110 | 10/50-M6 | 110 | 50 | 12 | 10 | 50 |
| 79402b12080 | 12/10-M8 | 80 | 10 | 14 | 13 | 25 |
| 79402b12090 | 12/20-M8 | 90 | 20 | 14 | 13 | 25 |
| 79402b12120 | 12/50-M8 | 120 | 50 | 14 | 13 | 25 |
| 79402b15090 | 15/10-M10 | 90 | 10 | 17 | 17 | 20 |
| 79402b15100 | 15/20-M10 | 100 | 20 | 17 | 17 | 20 |
| 79402b15130 | 15/50-M10 | 130 | 50 | 17 | 17 | 20 |
| 79402b15180 | 15/100-M10 | 180 | 100 | 17 | 17 | 20 |
| 79402b18110 | 18/10-M12 | 110 | 10 | 20 | 19 | 20 |
| 79402b18125 | 18/25-M12 | 125 | 25 | 20 | 19 | 20 |
| 79402b18150 | 18/50-M12 | 150 | 50 | 20 | 19 | 20 |
| 79402b18200 | 18/100-M12 | 200 | 100 | 20 | 19 | 20 |
| 79402b24125 | 24/10-M16 | 125 | 10 | 26 | 24 | 10 |
| 79402b24140 | 24/25-M16 | 140 | 25 | 26 | 24 | 10 |
| 79402b24165 | 24/50-M16 | 165 | 50 | 26 | 24 | 10 |
| 79402b24215 | 24/100-M16 | 215 | 100 | 26 | 24 | 10 |

## ATS-evo SK

**Hex socket countersunk head screw grade 8.8**
**White zinc plated**

| Code | do/tfix-d | L mm | tfix mm | df mm | dsk mm | k mm | sw | Pkg. |
|---|---|---|---|---|---|---|---|---|
| 79303b10070 | 10/15-M6 | 70 | 15 | 12 | 17 | 5 | 5 | 50 |
| 79303b10080 | 10/25-M6 | 80 | 25 | 12 | 17 | 5 | 5 | 50 |
| 79303b12080 | 12/16-M8 | 80 | 16 | 14 | 21 | 6 | 6 | 25 |
| 79303b12090 | 12/26-M8 | 90 | 26 | 14 | 21 | 6 | 6 | 25 |
| 79303b15090 | 15/17-M10 | 90 | 17 | 17 | 26 | 7 | 8 | 20 |
| 79303b15100 | 15/27-M10 | 100 | 27 | 17 | 26 | 7 | 8 | 20 |
| 79303b18125 | 18/33-M12 | 125 | 33 | 20 | 31 | 8 | 10 | 20 |

**VERSIONS:**
- hex head screw
- threaded bar with hex nut
- hex socket countersunk head screw

**PRODUCT FEATURES:**
- 8.8 grade steel screw and threaded bar
- thick shear sleeve for high shear strength
- special nylon bush
- white zinc plated

**BASE MATERIALS:**
- cracked concrete
- concrete
- solid stone

● suitable applications ◒ partially suitable applications

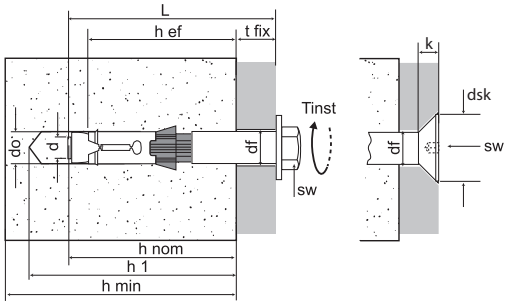


| | | | | | |
|---|---|---|---|---|---|
| d | = | screw/bar diameter | k | = | countersunk head depth |
| df | = | hole diameter of fixing element | L | = | anchor length |
| do | = | hole diameter | sw | = | wrench |
| dsk | = | countersunk head diameter | tfix | = | fixture thickness |
| h1 | = | minimum hole depth | Tinst | = | torque |
| hef | = | minimum depth of anchorage | | | |
| hmin | = | minimum support thickness | | | |
| hnom | = | nominal embedment depth | | | |

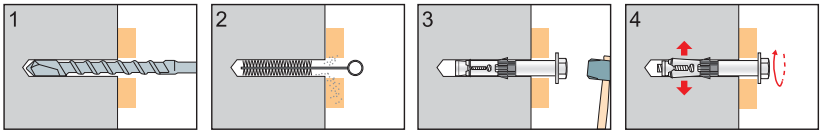


## DESIGN(1) AND RECOMMENDED(2) LOADS

### Single anchor with large anchor spacing and edge distances in cracked and non-cracked concrete C20/25

| Anchor | | | M6 | M8 | M10 | M12 | M16 |
|---|---|---|---|---|---|---|---|
| Minimum support thickness | $h_{min}$ | mm | 100 | 120 | 140 | 180 | 200 |
| Minimum hole depth | $h_1$ | mm | 75 | 85 | 95 | 115 | 130 |
| Nominal embedment depth | $h_{nom}$ | mm | 60 | 70 | 80 | 100 | 115 |
| Minimum depth of anchorage | $h_{ef}$ | mm | 49 | 59 | 67 | 88 | 99 |
| Hole diameter | $d_0$ | mm | 10 | 12 | 15 | 18 | 24 |
| Spacing | $S_{cr,N}$ | mm | 147 | 177 | 201 | 264 | 297 |
| Edge distance | $C_{cr,N}$ | mm | 74 | 89 | 101 | 132 | 149 |
| Tensile cracked concrete | $N_{rd}$ | kN | 6,0 | 8,0 | 10,6 | 16,7 | 23,7 |
| | N | kN | 4,3 | 5,7 | 7,6 | 11,9 | 16,9 |
| Tensile non-cracked concrete | $N_{rd}$ | kN | 10,7 | 15,2 | 18,4 | 27,7 | 33,1 |
| | N | kN | 7,7 | 10,9 | 13,2 | 19,8 | 23,6 |
| Shear C >= 10xhef | $V_{rd}$ | kN | 11,2 | 20,8 | 33,6 | 40,0 | 77,6 |
| | V | kN | 8,0 | 14,9 | 24,0 | 28,6 | 55,4 |
| Minimum spacing | $S_{min}$ | mm | 50 | 60 | 70 | 80 | 100 |
| | for C | mm | 75 | 90 | 100 | 150 | 200 |
| Minimum edge distance | $C_{min}$ | mm | 50 | 60 | 70 | 80 | 100 |
| | for S | mm | 75 | 90 | 100 | 150 | 200 |
| Shear C = Cmin | $V_{rd,cmin}$ | kN | 2,3 | 3,3 | 4,6 | 6,3 | 9,8 |
| | $V_{cmin}$ | kN | 1,6 | 2,4 | 3,3 | 4,5 | 7,0 |
| Torque | $T_{inst}$ | Nm | 10 | 20 | 45 | 80 | 150 |

1kN = 100 kgf

(1) The design loads $N_{rd}$ and $V_{rd}$ derive from the characteristic loads on the ETA 10/0423 certification and are inclusive of the partial safety factors $\gamma_m$ proportional to each diameter (see ETA).

(2) The recommended loads N and V derive from the characteristic loads on the ETA 10/0423 certification and are inclusive of the partial safety factors $\gamma_f$=1.4 and $\gamma_m$ proportional to each diameter (see ETA).

The load values are only valid if the installation has been carried out correctly. The designing and calculation of the anchorage should be carried out in accordance with annex C, of the ETAG 001, design method A.

## OPTION 1
## Heavy duty through anchor for cracked concrete

**GREATER STABILITY**
Nine gripping dents for adhesion to hole walls

**HIGH RESISTANCE**
Special anti-corrosion coating with glossy finish
1000 hours in salt spray test



**SOLID EXPANSION**
Stainless steel clip with innovative design

## FM-753® CRACK NAUTILUS

Assembled
Hardened and tempered anchor body
Stainless steel A4 clip

ETA 09/0056 - op. 1

FIRE RESISTANCE F120

NAUTILUS 1000 h

Special anti-corrosion coating with glossy finish - 1000 hours in salt spray test

| Code | d x L mm | Thread length mm | do mm | tfix mm | df mm | sw | Pkg. | Outer box |
|---|---|---|---|---|---|---|---|---|
| 75350b08068 | M8x68 | 30 | 8 | 4 | 9 | 13 | 100 | 800 |
| 75350b08075 | M8x75 | 30 | 8 | 10 | 9 | 13 | 100 | 800 |
| 75350b08090 | M8x90 | 40 | 8 | 25 | 9 | 13 | 100 | 500 |
| 75350b08115 | M8x115 | 60 | 8 | 50 | 9 | 13 | 100 | 500 |
| 75350b08135 | M8x135 | 80 | 8 | 70 | 9 | 13 | 100 | 500 |
| 75350b08165 | M8x165 | 80 | 8 | 100 | 9 | 13 | 50 | 250 |
| 75350b10090 | M10x90 | 40 | 10 | 10 | 12 | 17 | 50 | 400 |
| 75350b10105 | M10x105 | 55 | 10 | 25 | 12 | 17 | 50 | 250 |
| 75350b10115 | M10x115 | 55 | 10 | 35 | 12 | 17 | 50 | 250 |
| 75350b10135 | M10x135 | 85 | 10 | 55 | 12 | 17 | 50 | 250 |
| 75350b10155 | M10x155 | 85 | 10 | 75 | 12 | 17 | 50 | 250 |
| 75350b10185 | M10x185 | 85 | 10 | 105 | 12 | 17 | 25 | 125 |
| 75350b12110 | M12x110 | 65 | 12 | 10 | 14 | 19 | 50 | 250 |
| 75350b12120 | M12x120 | 65 | 12 | 20 | 14 | 19 | 50 | 250 |
| 75350b12145 | M12x145 | 85 | 12 | 45 | 14 | 19 | 25 | 200 |
| 75350b12170 | M12x170 | 85 | 12 | 70 | 14 | 19 | 25 | 125 |
| 75350b12200 | M12x200 | 85 | 12 | 100 | 14 | 19 | 25 | 125 |
| 75350b16130 | M16x130 | 65 | 16 | 10 | 18 | 24 | 20 | 120 |
| 75350b16150 | M16x150 | 85 | 16 | 30 | 18 | 24 | 20 | 100 |
| 75350b16185 | M16x185 | 85 | 16 | 60 | 18 | 24 | 20 | 80 |
| 75350b16220 | M16x220 | 85 | 16 | 100 | 18 | 24 | 15 | 90 |

## FM-753® CRACK
### - INOX A4 -

Assembled
Stainless steel A4

ETA 10/0293 - op. 1

FIRE RESISTANCE F120

| Code | d x L mm | Thread length mm | do mm | tfix mm | df mm | sw | Pkg. | Outer box |
|---|---|---|---|---|---|---|---|---|
| 75350008068 | M8x68 | 30 | 8 | 4 | 9 | 13 | 100 | 800 |
| 75350008075 | M8x75 | 30 | 8 | 10 | 9 | 13 | 100 | 800 |
| 75350008090 | M8x90 | 40 | 8 | 25 | 9 | 13 | 100 | 500 |
| 75350008115 | M8x115 | 60 | 8 | 50 | 9 | 13 | 100 | 500 |
| 75350008135 | M8x135 | 80 | 8 | 70 | 9 | 13 | 100 | 500 |
| 75350008165 | M8x165 | 80 | 8 | 100 | 9 | 13 | 50 | 250 |
| 75350010090 | M10x90 | 40 | 10 | 10 | 12 | 17 | 50 | 400 |
| 75350010105 | M10x105 | 55 | 10 | 25 | 12 | 17 | 50 | 250 |
| 75350010115 | M10x115 | 55 | 10 | 35 | 12 | 17 | 50 | 250 |
| 75350010135 | M10x135 | 85 | 10 | 55 | 12 | 17 | 50 | 250 |
| 75350010155 | M10x155 | 85 | 10 | 75 | 12 | 17 | 50 | 250 |
| 75350010185 | M10x185 | 85 | 10 | 105 | 12 | 17 | 25 | 125 |
| 75350012110 | M12x110 | 65 | 12 | 10 | 14 | 19 | 50 | 250 |
| 75350012120 | M12x120 | 65 | 12 | 20 | 14 | 19 | 50 | 250 |
| 75350012145 | M12x145 | 85 | 12 | 45 | 14 | 19 | 25 | 200 |
| 75350012170 | M12x170 | 85 | 12 | 70 | 14 | 19 | 25 | 125 |
| 75350012200 | M12x200 | 85 | 12 | 100 | 14 | 19 | 25 | 125 |
| 75350016130 | M16x130 | 65 | 16 | 10 | 18 | 24 | 20 | 120 |
| 75350016150 | M16x150 | 85 | 16 | 30 | 18 | 24 | 20 | 100 |
| 75350016185 | M16x185 | 85 | 16 | 60 | 18 | 24 | 20 | 80 |
| 75350016220 | M16x220 | 85 | 16 | 100 | 18 | 24 | 15 | 90 |

# FM-753® CRACK

## Heavy duty through anchor for cracked concrete

**VERSIONS:**

- **NAUTILUS special anti-corrosion coating**
- **stainless steel A4**

**PRODUCT FEATURES:**

- **hardened and tempered steel grade 9.8 anchor body**
- **stainless steel expander clip**
- **increased thickness of three expander segments**
- **nine gripping dents for greater adhesion to hole wall**

**BASE MATERIALS:**

- cracked concrete
- concrete
- solid stone

● suitable applications ◒ partially suitable applications

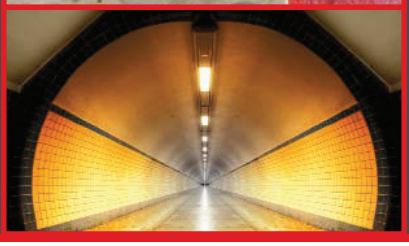

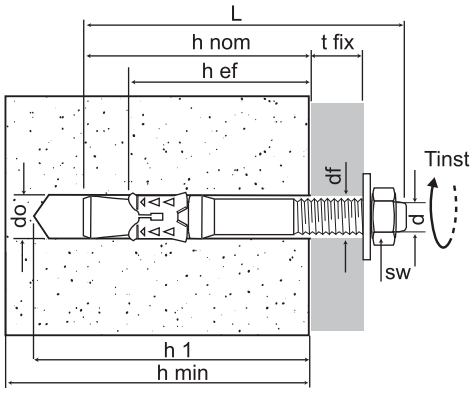


| | | | | | |
|---|---|---|---|---|---|
| d | = | screw diameter | sw | = | wrench |
| df | = | hole diameter of fixing element | tfix | = | fixture thickness |
| do | = | hole diameter | Tinst | = | torque |
| h1 | = | minimum hole depth | | | |
| hef | = | minimum depth of anchorage | | | |
| hmin | = | minimum support thickness | | | |
| hnom | = | nominal embedment depth | | | |
| L | = | anchor length | | | |

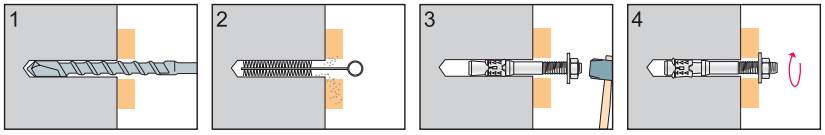


## DESIGN(1) AND RECOMMENDED(2) LOADS

### Single anchor with large anchor spacing and edge distances in cracked and non-cracked concrete C20/25

| Anchor | | | | M8 | M10 | M12 | M16 |
|---|---|---|---|---|---|---|---|
| Minimum support thickness | | $h_{min}$ | mm | 100 | 120 | 150 | 170 |
| Minimum hole depth | | $h_1$ | mm | 70 | 80 | 100 | 115 |
| Nominal embedment depth | | $h_{nom}$ | mm | 54 | 67 | 81 | 97 |
| Minimum depth of anchorage | | $h_{ef}$ | mm | 48 | 60 | 72 | 86 |
| Hole diameter | | $d_0$ | mm | 8 | 10 | 12 | 16 |
| Spacing | | $S_{cr,N}$ | mm | 144 | 180 | 220 | 260 |
| Edge distance | | $C_{cr,N}$ | mm | 72 | 90 | 110 | 130 |
| FM-753® CRACK NAUTILUS coating glossy finish ETA 09/0056 | Tensile cracked concrete | $N_{rd}$ | kN | 4,1 | 8,0 | 10,6 | 13,3 |
| | | N | kN | 2,9 | 5,7 | 7,6 | 9,5 |
| | Tensile non-cracked concrete | $N_{rd}$ | kN | 6,0 | 10,6 | 13,3 | 23,4 |
| | | N | kN | 4,3 | 7,6 | 9,5 | 16,7 |
| | Shear C >= 10x$h_{ef}$ | $V_{rd}$ | kN | 8,6 | 16,0 | 22,7 | 44,0 |
| | | V | kN | 6,2 | 11,4 | 16,2 | 31,4 |
| | Minimum spacing | $S_{min}$ | mm | 50 | 60 | 70 | 80 |
| | | for C | mm | 65 | 80 | 90 | 120 |
| | Minimum edge distance | $C_{min}$ | mm | 50 | 60 | 70 | 85 |
| | | for S | mm | 75 | 120 | 150 | 170 |
| | Shear C = $C_{min}$ | $V_{rd,cmin}$ | kN | 2,1 | 3,2 | 4,3 | 6,6 |
| | | $V_{cmin}$ | kN | 1,5 | 2,3 | 3,1 | 4,7 |
| FM-753® CRACK stainless steel A4 ETA 10/0293 | Tensile cracked concrete | $N_{rd}$ | kN | 3,4 | 6,0 | 8,0 | 16,7 |
| | | N | kN | 2,4 | 4,3 | 5,7 | 11,9 |
| | Tensile non-cracked concrete | $N_{rd}$ | kN | 6,0 | 10,6 | 13,3 | 23,4 |
| | | N | kN | 4,3 | 7,6 | 9,5 | 16,7 |
| | Shear C >= 10x$h_{ef}$ | $V_{rd}$ | kN | 9,1 | 14,6 | 21,1 | 39,2 |
| | | V | kN | 6,5 | 10,4 | 15,1 | 28,0 |
| | Minimum spacing | $S_{min}$ | mm | 50 | 55 | 60 | 70 |
| | | for C | mm | 50 | 70 | 80 | 100 |
| | Minimum edge distance | $C_{min}$ | mm | 50 | 50 | 60 | 70 |
| | | for S | mm | 50 | 100 | 120 | 130 |
| | Shear C = $C_{min}$ | $V_{rd,cmin}$ | kN | 2,1 | 2,4 | 3,5 | 4,9 |
| | | $V_{cmin}$ | kN | 1,5 | 1,7 | 2,5 | 3,5 |
| Torque | | $T_{inst}$ | Nm | 20 | 40 | 60 | 120 |

1kN = 100 kgf

(1) The design loads $N_{rd}$ and $V_{rd}$ derive from the characteristic loads on the ETA certification and are inclusive of the partial safety factors $\gamma_m$ proportional to each diameter (see ETA).

(2) The recommended loads N and V derive from the characteristic loads on the ETA certification and are inclusive of the partial safety factors $\gamma_f$=1.4 and $\gamma_m$ proportional to each diameter (see ETA).

The load values are only valid if the installation has been carried out correctly. The designing and calculation of the anchorage should be carried out in accordance with annex C, of the ETAG 001, design method A.

# Heavy duty through anchor

**ANTI-SLIDING**
**The shape of the expander clip guarantees a high fastening capacity**



**HIGH RESISTANCE**
**Achieved through the cold forging process**



**UNIFORM EXPANSION**
**The special clip ensures an uniform distribution of pressure in the hole**

## FM-753®

**White zinc plated**
**Assembled**

ETA 01/0014 - op. 7

## FM-753® - INOX A4 -

**Stainless steel A4**
**Assembled**

ETA 01/0009 - op. 7

## FM-753® NAUTILUS

**Stainless steel A4 clip**
**Assembled**

ETA 13/0367 - op. 7

NAUTILUS 1000 h

**Special anti-corrosion coating with matte finish - 1000 hours in salt spray test**

| White zinc plated Code | Stainless steel A4 Code | NAUTILUS Code | d x L mm | Thread length mm | do mm | tfix mm | df mm | sw | Box q.ty | Outer box |
|---|---|---|---|---|---|---|---|---|---|---|
| 75320b06045(1)(2) | | 75320c06045(1) | M6x45 | 20 | 6 | 3 | 7 | 10 | 200 | 2000 |
| 75320b06065 | 75320006065(2) | 75320c06065 | M6x65 | 40 | 6 | 15 | 7 | 10 | 100 | 1000 |
| 75320b06085 | 75320006085(2) | 75320c06085 | M6x85 | 60 | 6 | 35 | 7 | 10 | 100 | 1000 |
| 75320b06100 | | 75320c06100 | M6x100 | 60 | 6 | 50 | 7 | 10 | 50 | 500 |
| 75320b08050(1)(2) | 75320008050(1)(2) | 75320c08050(1) | M8x50 | 23 | 8 | 5 | 9 | 13 | 100 | 1000 |
| 75320b08065 | 75320008065 | 75320c08065 | M8x65 | 38 | 8 | 7 | 9 | 13 | 100 | 800 |
| 75320b08075 | 75320008075 | 75320c08075 | M8x75 | 48 | 8 | 15 | 9 | 13 | 100 | 800 |
| 75320b08090 | 75320008090 | 75320c08090 | M8x90 | 63 | 8 | 30 | 9 | 13 | 100 | 500 |
| 75320b08115 | 75320008115 | 75320c08115 | M8x115 | 83 | 8 | 55 | 9 | 13 | 100 | 500 |
| 75320b08135 | 75320008135 | 75320c08135 | M8x135 | 88 | 8 | 75 | 9 | 13 | 100* | 500 |
| 75320b08165 | 75320008165 | 75320c08165 | M8x165 | 88 | 8 | 105 | 9 | 13 | 50 | 250 |
| 75320b10060(1)(2) | 75320010060(1)(2) | 75320c10060(1) | M10x60 | 28 | 10 | 5 | 12 | 17 | 50 | 500 |
| 75320b10075 | 75320010075 | 75320c10075 | M10x75 | 43 | 10 | 5 | 12 | 17 | 50 | 500 |
| 75320b10090 | 75320010090 | 75320c10090 | M10x90 | 55 | 10 | 20 | 12 | 17 | 50 | 400 |
| 75320b10100 | | 75320c10100 | M10x100 | 60 | 10 | 30 | 12 | 17 | 50 | 400 |
| 75320b10120 | 75320010120 | 75320c10120 | M10x120 | 85 | 10 | 50 | 12 | 17 | 50 | 250 |
| 75320b10145 | | 75320c10145 | M10x145 | 85 | 10 | 75 | 12 | 17 | 50 | 250 |
| 75320b10170 | | 75320c10170 | M10x170 | 85 | 10 | 100 | 12 | 17 | 50 | 200 |
| 75320b10210(2) | | | M10x210 | 85 | 10 | 140 | 12 | 17 | 25 | 200 |
| 75320b12080(1)(2) | 75320012080(1)(2) | 75320c12080(1) | M12x80 | 40 | 12 | 7 | 14 | 19 | 50 | 300 |
| 75320b12100 | 75320012100 | 75320c12100 | M12x100 | 58 | 12 | 10 | 14 | 19 | 50 | 250 |
| 75320b12110 | 75320012110 | 75320c12110 | M12x110 | 68 | 12 | 20 | 14 | 19 | 50 | 250 |
| 75320b12135 | 75320012135 | 75320c12135 | M12x135 | 93 | 12 | 45 | 14 | 19 | 25 | 200 |
| 75320b12160 | 75320012160 | 75320c12160 | M12x160 | 93 | 12 | 70 | 14 | 19 | 25 | 150 |
| 75320b12185 | 75320012185 | 75320c12185 | M12x185 | 93 | 12 | 100 | 14 | 19 | 25 | 150 |
| 75320b12200(2) | | | M12x200 | 93 | 12 | 115 | 14 | 19 | 20 | 120 |
| 75320b12220(2) | | | M12x220 | 93 | 12 | 135 | 14 | 19 | 20 | 120 |
| 75320b12240(2) | | | M12x240 | 93 | 12 | 155 | 14 | 19 | 20 | 120 |
| 75320b12255(2) | | | M12x255 | 93 | 12 | 170 | 14 | 19 | 20 | 100 |
| 75320b12285(2) | | | M12x285 | 93 | 12 | 200 | 14 | 19 | 20 | 100 |
| 75320b12300(2) | | | M12x300 | 93 | 12 | 215 | 14 | 19 | 20 | 100 |
| 75320b12325(2) | | | M12x325 | 93 | 12 | 240 | 14 | 19 | 20 | 75 |
| 75320b12355(2) | | | M12x335 | 93 | 12 | 270 | 14 | 19 | 20 | 75 |
| 75320b14100 | | | M14x100 | 50 | 14 | 3 | 16 | 22 | 25 | 150 |
| 75320b14110 | | | M14x110 | 60 | 14 | 10 | 16 | 22 | 25 | 150 |
| 75320b14130 | | | M14x130 | 65 | 14 | 30 | 16 | 22 | 25 | 150 |
| 75320b14150 | | | M14x150 | 90 | 14 | 50 | 16 | 22 | 25 | 100 |
| 75320b14170 | | | M14x170 | 90 | 14 | 70 | 16 | 22 | 25 | 100 |
| 75320b14200 | | | M14x200 | 90 | 14 | 100 | 16 | 22 | 25 | 100 |
| 75320b16110(1)(2) | 75320016110(1)(2) | 75320c16110(1) | M16x110 | 53 | 16 | 15 | 18 | 24 | 20 | 100 |
| 75320b16125 | 75320016125 | 75320c16125 | M16x125 | 68 | 16 | 10 | 18 | 24 | 20 | 100 |
| 75320b16145 | 75320016145 | 75320c16145 | M16x145 | 88 | 16 | 30 | 18 | 24 | 20 | 100 |
| 75320b16175 | 75320016175 | 75320c16175 | M16x175 | 88 | 16 | 60 | 18 | 24 | 20 | 80 |
| 75320b16215 | | 75320c16215 | M16x215 | 88 | 16 | 100 | 18 | 24 | 15 | 60 |
| 75320b16230(2) | | | M16x230 | 88 | 16 | 115 | 18 | 24 | 10 | 50 |
| 75320b16250(2) | | | M16x250 | 88 | 16 | 135 | 18 | 24 | 10 | 50 |
| 75320b16270(2) | | | M16x270 | 88 | 16 | 155 | 18 | 24 | 10 | 50 |
| 75320b16285(2) | | | M16x285 | 88 | 16 | 170 | 18 | 24 | 10 | 50 |
| 75320b16320(2) | | | M16x320 | 88 | 16 | 205 | 18 | 24 | 10 | 50 |
| 75320b20170(2) | | 75320c20170 | M20x170 | 60 | 20 | 30 | 22 | 30 | 10 | 50 |
| 75320b20215(2) | | 75320c20215 | M20x215 | 60 | 20 | 75 | 22 | 30 | 10 | 50 |
| 75320b24160▲(1)(2) | | | M24x160 | 60 | 24 | 10 | 26 | 36 | 10 | |
| 75320b24180▲(2) | | | M24x180 | 60 | 24 | 10 | 26 | 36 | 10 | |
| 75320b24200▲(2) | | | M24x200 | 80 | 24 | 30 | 26 | 36 | 10 | |
| 75320b24220▲(2) | | | M24x220 | 100 | 24 | 50 | 26 | 36 | 10 | |
| 75320b24260▲(2) | | | M24x260 | 100 | 24 | 90 | 26 | 36 | 10 | |
| 75320b24310▲(2) | | | M24x310 | 100 | 24 | 140 | 26 | 36 | 10 | |

(1) Anchors with reduced embedment depths. (2) Sizes not covered by CE certification. *50 for Stainless steel A4.

▲ Quantity and delivery terms to be agreed

**VERSIONS:**
- white zinc plated
- stainless steel A4
- NAUTILUS special anti-corrosion coating with stainless steel A4 clip

**PRODUCT FEATURES:**
- cold forged anchor body
- increased thickness of three expander segments
- six teeth and anti-slip ridge to prevent slip during tightening

**BASE MATERIALS:**
- concrete
- solid stone

● suitable applications ◒ partially suitable applications

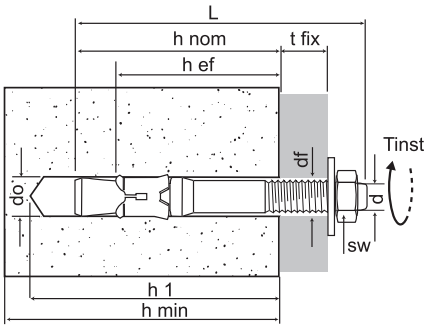


| | | | | | |
|---|---|---|---|---|---|
| d | = | screw diameter | hnom | = | nominal embedment depth |
| df | = | hole diameter of fixing element | L | = | anchor length |
| do | = | hole diameter | sw | = | wrench |
| h1 | = | minimum hole depth | tfix | = | fixture thickness |
| hef | = | minimum depth of anchorage | Tinst | = | torque |
| hmin | = | minimum support thickness | | | |

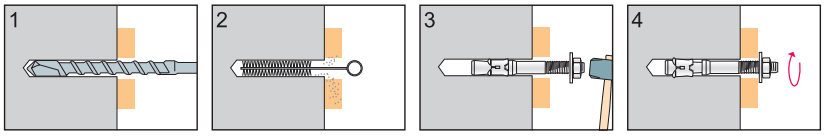


## DESIGN(1) AND RECOMMENDED(2) LOADS

### Single anchor with large anchor spacing and edge distances in non-cracked concrete C20/25 - Standard embedment depth

| Anchor | | | | M6 | M8 | M10 | M12 | M14 | M16 | M20 | M24 |
|---|---|---|---|---|---|---|---|---|---|---|---|
| Minimum support thickness | | $h_{min}$ | mm | 100 | 100 | 100 | 120 | 140 | 170 | 200 | 240 |
| Minimum hole depth | | $h_1$ | mm | 50 | 60 | 70 | 85 | 95 | 115 | 130 | 165 |
| Nominal embedment depth | | $h_{nom}$ | mm | 41 | 48 | 59 | 71 | 80 | 96 | 115 | 145 |
| Minimum depth of anchorage | | $h_{ef}$ | mm | 35 | 40 | 50 | 60 | 70 | 85 | 95 | 120 |
| Hole diameter | | $d_0$ | mm | 6 | 8 | 10 | 12 | 14 | 16 | 20 | 24 |
| Spacing | | $S_{cr,N}$ | mm | 105 | 120 | 150 | 180 | 210 | 255 | 290 | 360 |
| Edge distance | | $C_{cr,N}$ | mm | 53 | 60 | 75 | 90 | 105 | 130 | 145 | 180 |
| FM-753® - CE certified white zinc plated ETA 01/0014 | Tensile non-cracked concrete | $N_{rd}$ | kN | 3,4 | 5,0 | 6,7 | 13,3 | 16,7 | 23,4 | 23,5(3) | 32,0(3) |
| | | N | kN | 2,4 | 3,6 | 4,8 | 9,5 | 11,9 | 16,7 | 17,0(3) | 23,0(3) |
| | Shear C >= 10x$h_{ef}$ | $V_{rd}$ | kN | 4,1 | 6,0 | 9,8 | 12,3 | 21,4 | 28,1 | 37,0(3) | 53,0(3) |
| | | V | kN | 2,9 | 4,3 | 7,0 | 8,8 | 15,3 | 20,1 | 26,5(3) | 38,0(3) |
| FM-753® - CE certified stainless steel A4 ETA 01/0009 | Tensile non-cracked concrete | $N_{rd}$ | kN | 2,2(3) | 5,0 | 8,0 | 15,5 | - | 23,4 | - | - |
| | | N | kN | 1,6(3) | 3,6 | 5,7 | 11,1 | - | 16,7 | - | - |
| | Shear C >= 10x$h_{ef}$ | $V_{rd}$ | kN | 3,5(3) | 9,0 | 14,1 | 20,7 | - | 38,5 | - | - |
| | | V | kN | 2,5(3) | 6,4 | 10,1 | 14,8 | - | 27,5 | - | - |
| FM-753® - CE certified NAUTILUS hrg opaque ETA 13/0367 | Tensile non-cracked concrete | $N_{rd}$ | kN | 4,1 | 8,0 | 8,0 | 15,7 | - | 23,4 | 26,6 | - |
| | | N | kN | 2,9 | 5,7 | 5,7 | 11,2 | - | 16,7 | 19,0 | - |
| | Shear C >= 10x$h_{ef}$ | $V_{rd}$ | kN | 4,3 | 6,2 | 9,2 | 13,4 | - | 28,4 | 34,3 | - |
| | | V | kN | 3,1 | 4,4 | 6,6 | 9,6 | - | 20,3 | 24,5 | - |
| Minimum spacing | | $S_{min}$ | mm | 50 | 60 | 75 | 90 | 105 | 130 | 145 | 180 |
| Minimum edge distance | | $C_{min}$ | mm | 50 | 60 | 75 | 90 | 105 | 130 | 145 | 180 |
| Shear C = $C_{min}$ | | $V_{rd,cmin}$ | kN | 1,7 | 2,5 | 3,9 | 5,7 | 7,8 | 11,6 | 15,3 | 23,2 |
| | | $V_{cmin}$ | kN | 1,2 | 1,8 | 2,8 | 4,1 | 5,6 | 8,3 | 10,9 | 16,6 |
| Torque | | $T_{inst}$ | Nm | 6 | 15 | 25 | 50 | 70 | 100 | 160 | 200 |

### Single anchor with large anchor spacing and edge distances in non-cracked concrete C20/25 Reduced embedment depth - Not certified(4)

| Anchor | | | | M6 | M8 | M10 | M12 | M16 | M24 |
|---|---|---|---|---|---|---|---|---|---|
| Minimum support thickness | | $h_{min}$ | mm | 100 | 100 | 100 | 100 | 130 | 200 |
| Minimum hole depth | | $h_1$ | mm | 45 | 50 | 55 | 70 | 95 | 145 |
| Nominal embedment depth | | $h_{nom}$ | mm | 36 | 38 | 44 | 56 | 76 | 125 |
| Minimum depth of anchorage | | $h_{ef}$ | mm | 30 | 30 | 35 | 45 | 65 | 100 |
| Hole diameter | | $d_0$ | mm | 6 | 8 | 10 | 12 | 16 | 24 |
| Spacing | | $S_{cr,N}$ | mm | 120 | 120 | 140 | 180 | 260 | 400 |
| Edge distance | | $C_{cr,N}$ | mm | 90 | 90 | 105 | 135 | 195 | 300 |
| FM-753® - CE certified NAUTILUS hrg opaque ETA 13/0367 | Tensile non-cracked concrete | $N_{rd}$ | kN | 3,4 | 4,1 | 4,1 | 8,0 | 17,6 | - |
| | | N | kN | 2,4 | 2,9 | 2,9 | 5,7 | 12,6 | - |
| | Shear C >= 10x$h_{ef}$ | $V_{rd}$ | kN | 4,3 | 6,2 | 9,2 | 13,4 | 28,4 | - |
| | | V | kN | 3,1 | 4,4 | 6,6 | 9,6 | 20,3 | - |
| Tensile/Shear non-cracked concrete Not certified(3) | | $F_{rd}$ | kN | 1,8 | 2,0 | 3,5 | 4,9 | 8,4 | 11,2 |
| | | F | kN | 1,3 | 1,4 | 2,5 | 3,5 | 6,0 | 8,0 |
| Minimum spacing | | $S_{min}$ | mm | 45 | 50 | 55 | 70 | 100 | 150 |
| Minimum edge distance | | $C_{min}$ | mm | 45 | 50 | 55 | 70 | 100 | 150 |
| Torque | | $T_{inst}$ | Nm | 6 | 15 | 25 | 50 | 100 | 200 |

1kN = 100 kgf

(1) The design loads $N_{rd}$ and $V_{rd}$ derive from the characteristic loads on the ETA certification and are inclusive of the partial safety factors $\gamma_m$ proportional to each diameter (see ETA).
(2) The recommended loads N and V derive from the characteristic loads on the ETA certification and are inclusive of the partial safety factors $\gamma_f$=1.4 and $\gamma_m$ proportional to each diameter (see ETA).
(3) Versions Not Certified: white zinc plated and size M6 of stainless steel A4. The recommended loads N, V or F derive from the mean ultimate loads and are inclusive of the total safety factor $\gamma$=4 (shear $\gamma$=3).
In the absence of CE markings, the recommended loads derive from tests carried out in the Friulsider laboratory in accordance with the appropriate standards. The load values are only valid if the installation has been carried out correctly. The designing and calculation of the anchorage should be carried out in accordance with annex C, of the ETAG 001, design method A.

# TAP
## Rimmed hammerset anchor

**VERSIONS:**
- white zinc plated anchor
- stainless steel A2 anchor

**PRODUCT FEATURES:**
- rimmed plug for easy installation flush with base material
- high strength in relation to embedment depths

**BASE MATERIALS:**
- concrete
- solid stone

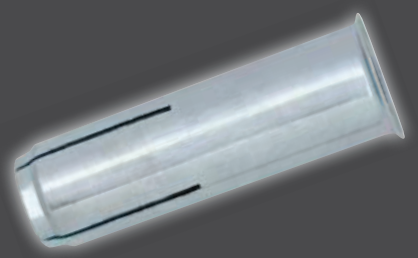

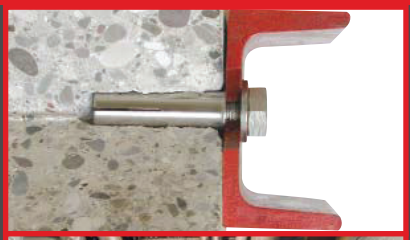

● suitable applications ◓ partially suitable applications

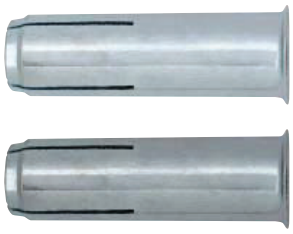

| White zinc plated Code | Stainless steel A2* Code | Lf mm | Lu mm | Plug do x L mm | d | Pkg. | Outer box |
|---|---|---|---|---|---|---|---|
| 75203b06000 | 75204006000 | 11 | 6 | 8x25 | M6 | 100 | 2000 |
| 75203b08000 | 75204008000 | 13 | 8 | 10x30 | M8 | 100 | 1000 |
| 75203b10000 | 75204010000 | 19 | 14 | 12x40 | M10 | 100 | 600 |
| 75203b12000 | 75204012000 | 23 | 18 | 15x50 | M12 | 50 | 300 |
| 75203b16000 | 75204016000 | 28 | 20 | 20x65 | M16 | 25 | 150 |

* Rimless anchors until end of stock
$Lv_{min}$ = Lu + tfix / $Lv_{max}$ = Lf + tfix

**Setting tool**

| Code | Setting tool | Pkg. |
|---|---|---|
| 49902b06000 | for M6 | 1 |
| 49902b08000 | for M8 | 1 |
| 49902b10000 | for M10 | 1 |
| 49902b12000 | for M12 | 1 |
| 49902b16000 | for M16 | 1 |

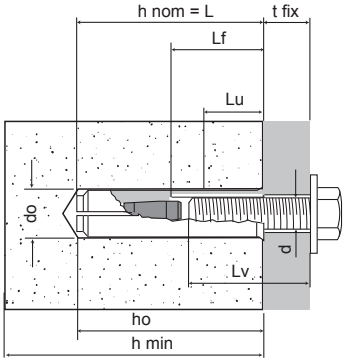


| | | | | | |
|---|---|---|---|---|---|
| d | = | screw diameter | Lf | = | threaded length |
| do | = | hole diameter | Lu | = | minimum thread engagement |
| hmin | = | minimum support thickness | Lv | = | metric screw length |
| hnom | = | nominal embedment depth | tfix | = | fixture thickness |
| ho | = | cylindrical hole depth | Tmax | = | maximum torque |
| L | = | anchor length | | | |

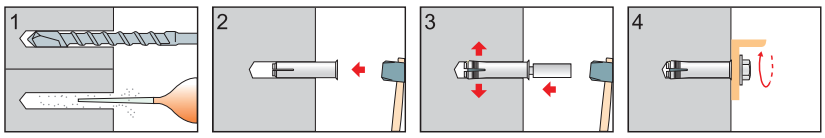


## DESIGN AND RECOMMENDED[1] LOADS
### Single anchor with large anchor spacing and edge distances in non-cracked concrete C20/25

| Anchor | | | M6 | M8 | M10 | M12 | M16 |
|---|---|---|---|---|---|---|---|
| Minimum support thickness | $h_{min}$ | mm | 100 | 100 | 100 | 120 | 140 |
| Depth of the hole | $h_0$ | mm | 25 | 30 | 40 | 50 | 65 |
| Nominal embedment depth | $h_{nom}$ | mm | 25 | 30 | 40 | 50 | 65 |
| Hole diameter | $d_0$ | mm | 8 | 10 | 12 | 15 | 20 |
| Spacing | $S_{cr,N}$ | mm | 125 | 150 | 200 | 250 | 325 |
| Edge distance | $C_{cr,N}$ | mm | 90 | 105 | 140 | 175 | 230 |
| Tensile non-cracked concrete | $N_{rd}$ | kN | 2,4 | 3,8 | 4,9 | 6,3 | 8,4 |
| | N | kN | 1,7 | 2,7 | 3,5 | 4,5 | 6,0 |
| Shear C >= 10x$h_{ef}$ screw grade 5.6 | $V_{rd}$ | kN | 2,8 | 5,2 | 8,1 | 11,8 | 20,4 |
| | V | kN | 2,0 | 3,7 | 5,8 | 8,4 | 14,6 |
| Nominal embedment depth | $S_{min}$ | mm | 50 | 60 | 80 | 100 | 130 |
| Minimum edge distance | $C_{min}$ | mm | 90 | 105 | 140 | 175 | 230 |
| Torque max | $T_{max}$ | Nm | 5 | 10 | 20 | 40 | 60 |

1kN = 100 kgf

[1] The recommended loads N and V derive from the mean ultimate loads and are inclusive of the total safety factor $\gamma$=4 (shear $\gamma$=3).
In the absence of CE markings, the recommended loads derive from tests carried out in the Friulsider laboratory in accordance with the appropriate standards.
The load values are only valid if the installation has been carried out correctly. The design engineer is responsible for the designing and calculation of the fixing.

# Chemical fixings:

- Styrene free pure epoxy
- Styrene free vinylester
- Styrene free polyester

**Friulsider, thanks to its experience matured in the fixing sector, offers a complete range of resins able to satisfy any type of fixing requirement**

**Most of the resins have obtained the European CE certification (also for cracked concrete) signifying safety and a high quality product**

**BASE MATERIALS:**

- ● concrete
- ● solid brick
- ● honeycomb brick
- ● cell like clay brick
- ● light weight honeycomb brick
- ● hollow dense aggregate block
- ● hollow light aggregate block
- ◒ aerated concrete
- ● solid stone
- ● wood (for KEM-UP 934-935)
- ◒ wood (for KEM-UP 941-942-943)

● suitable applications ◒ partially suitable applications

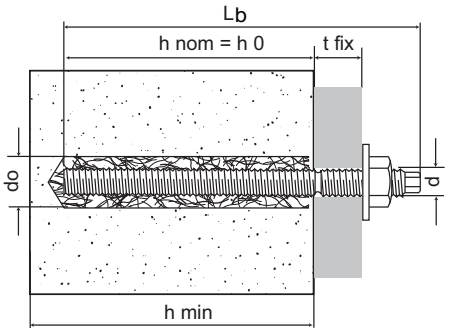


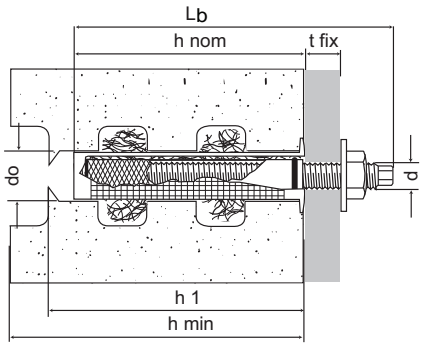


| | | |
|---|---|---|
| d | = | threaded bar diameter |
| do | = | hole diameter |
| h0 | = | minimum hole depth |
| hmin | = | minimum support thickness |
| hnom | = | nominal embedment depth |
| Lb | = | threaded bar length |
| tfix | = | fixture thickness |
| Tmax | = | torque |

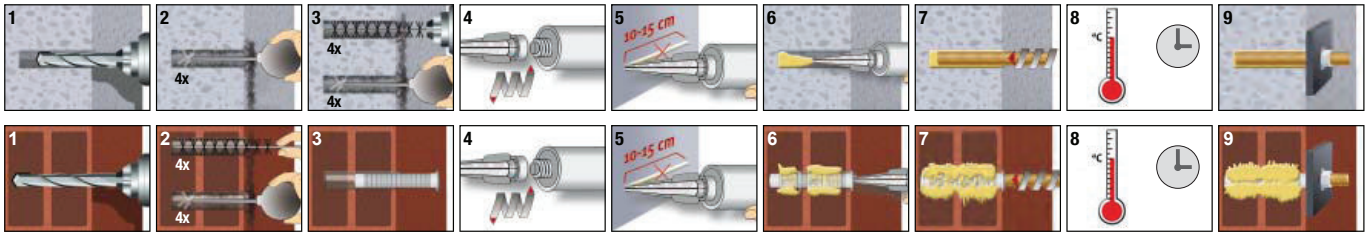


## KEM-UP EPOXY

**Styrene free pure epoxy chemical fixing**

## KEM-UP VINYLESTER

**Styrene free vinylester chemical fixing**

## KEM-UP POLYESTER

**Styrene free polyester chemical fixing**

**PRODUCT FEATURES:**

- Excellent performance
- Suitable for use on wood
- Suitable for underwater use
- Low shrinkage
- Excellent adhesive properties
- For structural fixings and wood floor reinforcement
- Suitable for damp base materials
- Excellent mechanical and thermal characteristics
- Styrene free
- Suitable for extremely aggressive atmospheres
- KEM-UP 934: ETA certificate op.1 and suitable for cracked concrete

# KEM-UP EPOXY Styrene free pure epoxy chemical fixing

ETA 09/0061 - op. 1

FIRE RESISTANCE F120

LEED tested

ETA 12/0542 - TR 023

ETA 12/0602 - op. 7 Diamond

| Code | Name | Content | Pkg. | Pcs/Pallet |
|---|---|---|---|---|
| 93400000000 | KEM-UP 934 | 585 ml | 12 | 672 |
| 93500000000* | KEM-UP 935 | 250 ml | 12 | 900 |

| KEM-UP 934 | | | | | |
|---|---|---|---|---|---|
| Temperature °C | + 5°C | + 10°C | + 20°C | + 30°C | + 40°C |
| Gel time | 120 min | 90 min | 30 min | 20 min | 12 min |
| Curing time | 50 h | 30 h | 10 h | 6 h | 4 h |
| Working temperature: -40 / +43°C (max 72°C for short period) | | | | | |

| KEM-UP 935* | | | | | |
|---|---|---|---|---|---|
| Temperature °C | + 5°C | + 10°C | + 20°C | + 30°C | + 40°C |
| Gel time | 140 min | 80 min | 40 min | 25 min | 12 min |
| Curing time | 50 h | 24 h | 10 h | 7 h | 5 h |
| Working temperature: -40 / +43°C (max 72°C for short period) | | | | | |

* Not covered by CE certification

## DESIGN(1) AND RECOMMENDED(2) LOADS (KEM-UP 934)

### Single anchor with large anchor spacing and edge distances in cracked and non-cracked concrete C20/25 (24°C - dry and wet hole)

| Anchor | | | M8 | M10 | M12 | M16 | M20 | M24 | M30 |
|---|---|---|---|---|---|---|---|---|---|
| Minimum support thickness | $h_{min}$ | mm | 110 | 120 | 140 | 160 | 220 | 270 | 340 |
| Nominal embedment depth = depth of hole | $h_{nom} = h_0$ | mm | 80 | 90 | 110 | 125 | 170 | 210 | 270 |
| Hole diameter | $d_0$ | mm | 10 | 12 | 14 | 18 | 24 | 28 | 35 |
| Spacing | $S_{cr,N}$ | mm | 2 x $C_{cr,N}$ | | | | | | |
| Edge distance | $C_{cr,N}$ | mm | 113 | 135 | 165 | 188 | 255 | 304 | 379 |
| Tensile cracked concrete | $N_{rd}$ | kN | - | - | 17,2 | 22,7 | 30,5 | 41,4 | 66,6 |
| | N | kN | - | - | 12,3 | 16,2 | 21,8 | 29,6 | 47,6 |
| Tensile non-cracked concrete | $N_{rd}$ | kN | 12,7 | 20,1 | 29,2 | 39,2 | 53,3 | 73,2 | 106,7 |
| | N | kN | 9,1 | 14,4 | 20,9 | 28,0 | 38,1 | 52,3 | 76,2 |
| Shear C >= 10x$h_{ef}$ screw grade 5.8 | $V_{rd}$ | kN | 7,0 | 12,0 | 17,0 | 31,0 | 50,0 | 70,0 | 112,0 |
| | V | kN | 5,0 | 8,5 | 12,0 | 22,0 | 35,0 | 50,0 | 80,0 |
| Minimum spacing | $S_{min}$ | mm | 40 | 50 | 60 | 80 | 100 | 120 | 150 |
| Minimum edge distance | $C_{min}$ | mm | 40 | 50 | 60 | 80 | 100 | 120 | 150 |
| Shear C = $C_{min}$ | $V_{rd,cmin}$ | kN | 1,8 | 2,8 | 3,9 | 6,7 | 10,9 | 15,7 | 24,8 |
| | $V_{cmin}$ | kN | 1,3 | 2,0 | 2,8 | 4,8 | 7,8 | 11,2 | 17,7 |
| Torque max | $T_{max}$ | Nm | 10 | 20 | 40 | 80 | 120 | 160 | 200 |

1kN = 100 kgf

(1) The design loads $N_{rd}$ and $V_{rd}$ derive from the characteristic loads on the ETA 09/0061 certification and are inclusive of the partial safety factors $\gamma_m$ proportional to each diameter (see ETA).

(2) The recommended loads N and V derive from the characteristic loads on the ETA 09/0061 certification and are inclusive of the partial safety factors $\gamma_f$=1.4 and $\gamma_m$ proportional to each diameter (see ETA). The decisive failure is the concrete cone.

The load values are only valid if the installation has been carried out correctly. The design engineer is responsible for the designing and calculation of the fixing.

**PRODUCT FEATURES:**

- High performance
- For structural fixings
- Suitable for damp base materials
- Excellent mechanical and thermal characteristics
- Can be applied and used up to -10°C
- Styrene free
- Suitable for aggressive atmospheres
- KEM-UP 941-942-943: ETA certificate op. 1

# KEM-UP VINYLESTER Styrene free vinylester chemical fixing

ETA 08/0383 - op. 1

FIRE RESISTANCE F120

LEED tested

-10°C

ETA 12/0543 - ETAG 029

ETA 12/0553 - TR 023

| Code | Name | Content | Pkg. | Pcs/Pallet |
|---|---|---|---|---|
| 94103000000 | KEM-UP 941 | 420 ml | 12 | 840 |
| 94201000000 | KEM-UP 942 | 345 ml | 12 | 1152 |
| 94301000000 | KEM-UP 943 | 300 ml | 12 | 1152 |

| KEM-UP 941-942-943 | | | | | | |
|---|---|---|---|---|---|---|
| Temperature °C | - 10°C | 0°C | + 10°C | + 20°C | + 30°C | + 40°C |
| Gel time | 90 min | 45 min | 15 min | 6 min | 4 min | 1,5 min |
| Curing time | 24 h | 7 h | 80 min | 45 min | 25 min | 15 min |
| Working temperature: -40 / +72°C (max 120°C for short period) | | | | | | |

## DESIGN(1) AND RECOMMENDED(2) LOADS (KEM-UP 941-942-943)

### Single anchor with large anchor spacing and edge distances in non-cracked concrete C20/25 (t=24°C - dry and wet hole)

| Anchor | | | M8 | M10 | M12 | M16 | M20 | M24 | M30 |
|---|---|---|---|---|---|---|---|---|---|
| Minimum support thickness | $h_{min}$ | mm | 110 | 120 | 140 | 155 | 220 | 270 | 340 |
| Nominal embedment depth = depth of hole | $h_{nom} = h_0$ | mm | 80 | 90 | 110 | 125 | 170 | 210 | 270 |
| Hole diameter | $d_0$ | mm | 10 | 12 | 14 | 18 | 24 | 28 | 35 |
| Spacing | $S_{cr,N}$ | mm | 184 | 252 | 304 | 376 | 500 | 580 | 660 |
| Edge distance | $C_{cr,N}$ | mm | 92 | 126 | 152 | 188 | 250 | 290 | 330 |
| Tensile non-cracked concrete | $N_{rd}$ | kN | 12,7 | 18,8 | 27,6 | 39,2 | 62,0 | 82,9 | 124,2 |
| | N | kN | 9,1 | 13,5 | 19,7 | 28,0 | 44,3 | 59,2 | 88,7 |
| Shear C >= 10x$h_{ef}$ screw grade 5.8 | $V_{rd}$ | kN | 7,0 | 12,0 | 17,0 | 31,0 | 50,0 | 70,0 | 112,0 |
| | V | kN | 5,0 | 8,5 | 12,0 | 22,0 | 35,0 | 50,0 | 80,0 |
| Minimum spacing | $S_{min}$ | mm | 40 | 50 | 60 | 80 | 100 | 120 | 150 |
| Minimum edge distance | $C_{min}$ | mm | 40 | 50 | 60 | 80 | 100 | 120 | 150 |
| Shear C = $C_{min}$ | $V_{rd,cmin}$ | kN | 1,8 | 2,8 | 3,9 | 6,7 | 10,9 | 15,7 | 24,8 |
| | $V_{cmin}$ | kN | 1,3 | 2,0 | 2,8 | 4,8 | 7,8 | 11,2 | 17,7 |
| Torque max | $T_{max}$ | Nm | 10 | 20 | 40 | 80 | 120 | 160 | 200 |

1kN = 100 kgf

(1) The design loads $N_{rd}$ and $V_{rd}$ derive from the characteristic loads on the ETA 08/0383 certification and are inclusive of the partial safety factors $\gamma_m$ proportional to each diameter (see ETA).

(2) The recommended loads N and V derive from the characteristic loads on the ETA 08/0383 certification and are inclusive of the partial safety factors $\gamma_f$=1.4 and $\gamma_m$ proportional to each diameter (see ETA).

The load values are only valid if the installation has been carried out correctly. The design engineer is responsible for the designing and calculation of the fixing.

| Code | For cartridge | Pkg. |
|---|---|---|
| 49949000000 | 280 ml / 300 ml / 310 ml | 12 |

| Code | For cartridge | Pkg. |
|---|---|---|
| 49903000000 | 380 ml / 420 ml | 1 |

| Code | For cartridge | Pkg. |
|---|---|---|
| 49904000000 | 250 ml / 300 ml / 345 ml | 1 |

| Code | For cartridge | Pkg. |
|---|---|---|
| 49932000000 | 585 ml | 1 |

**Professional gun**

| Code | For cartridge | Pkg. |
|---|---|---|
| 49930000000 | 250 ml / 300 ml / 380 ml / 420 ml / 585 ml | 1 |

**MIX**
**Cartridge mixer for KEM-UP EPOXY**

| Code | Pkg. |
|---|---|
| 94902000000 | 12 |

**MIX**
**Cartridge mixer for KEM-UP**

| Code | Pkg. |
|---|---|
| 94900000000 | 12 |

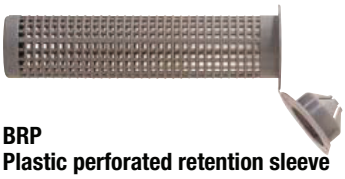

**BRP**
**Plastic perforated retention sleeve with centralising retention cone**

| Code | Retention sleeve Ø x L | Pkg. |
|---|---|---|
| 63300012050 | 12x50 | 10 |
| 63300015085 | 15x85 | 10 |
| 63300015130 | 15x130 | 10 |
| 63300020085 | 20x85 | 10 |

**BCF**
**Internally threaded socket white zinc plated**

| Code | Thread | Dimension | For retention sleeve | Pkg. |
|---|---|---|---|---|
| 63400b12080 | M8 | 12x80 | 20x85 | 10 |
| 63400b14080 | M10 | 14x80 | 20x85 | 10 |
| 63400b16080 | M12 | 16x80 | 20x85 | 10 |

**BRM**
**Metallic retention sleeve white zinc plated**

| Code | Dimension Ø x L | Hole Ø | For bar | Pkg. |
|---|---|---|---|---|
| 63310b12000 | 10x1000 | 12 | M8 | 10 |
| 63310b16000 | 13,5x1000 | 16 | M10 | 10 |
| 63310b22000 | 19,5x1000 | 22 | M12-M16 | 6 |

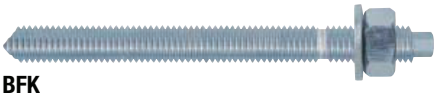

**BFK**
**Threaded bar grade 5.8**
**with external hexagon**
**white zinc plated**

| Code | Bar d x Lb | tfix mm | Pkg. |
|---|---|---|---|
| 21911b08110 | M8x110 | 15 | 10 |
| 21911b10115 | M10x115 | 15** | 10 |
| 21911b10130 | M10x130 | 25 | 10 |
| 21911b12120 | M12x120 | 18** | 10 |
| 21911b12160 | M12x160 | 30 | 10 |
| 21911b12220 | M12x220 | 90 | 5 |
| 21911b16190 | M16x190 | 40 | 5 |
| 21911b16210 | M16x210 | 60 | 5 |
| 21911b16250 | M16x250 | 100 | 5 |
| 21911b20240 | M20x240 | 45 | 5 |
| 21911b20260 | M20x260 | 65 | 5 |
| 21911b20300 | M20x300 | 100 | 5 |
| 21911b24290 | M24x290 | 50 | 5 |
| 21911b30380* | M30x380 | 70 | 2 |

*Threaded bar without external hexagon until end of stock
** For use with BRP on partially hollow base materials

**BFK A4**
**Threaded bar with external hexagon**
**stainless steel A4**

| Code | Bar d x Lb | tfix mm | Pkg. |
|---|---|---|---|
| 21911x08110 | M8x110 | 15 | 10 |
| 21911x10130 | M10x130 | 25 | 10 |
| 21911x12160 | M12x160 | 30 | 10 |
| 21911x16190 | M16x190 | 40 | 10 |
| 21911x20260 | M20x260 | 65 | 5 |
| 21911x24300 | M24x300 | 60 | 5 |
| 21911x30380* | M30x380 | 70 | 2 |

*Threaded bar without external hexagon until end of stock

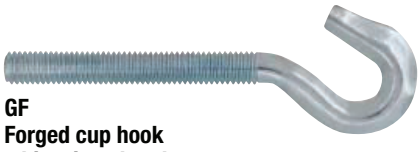

**GF**
**Forged cup hook**
**white zinc plated**

| Code | Cup hook | Ø int. cup hook | Pkg. |
|---|---|---|---|
| 77602b06050 | M6x50 | 9,5 | 50 |
| 77602b08060 | M8x60 | 11 | 50 |
| 77602b10073 | M10x73 | 14 | 25 |
| 77602b12090 | M12x90 | 16 | 15 |
| 77602b16100 | M16x100 | 20 | 15 |

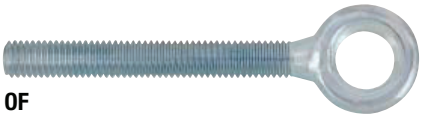

**OF**
**Forged eye**
**white zinc plated**

| Code | Eye | Ø int. eye | Pkg. |
|---|---|---|---|
| 77601b06050 | M6x50 | 10 | 50 |
| 77601b08060 | M8x60 | 11 | 50 |
| 77601b10073 | M10x73 | 14,5 | 25 |
| 77601b12090 | M12x90 | 17 | 15 |
| 77601b16100 | M16x100 | 23 | 15 |

**PUMP**
**Blow pump for hole cleaning**

| Code | Pkg. |
|---|---|
| 49905000000 | 1 |

# Multi-expansion long plug

**MAXIMUM VERSATILITY**
**Tested in all base materials**

**ULTRA FLEXIBLE**
**High quality nylon**

**CAN ALSO BE FIXED BY HAND**
**Low torque needed during expansion**

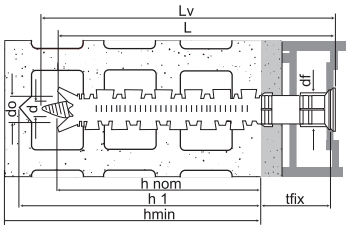


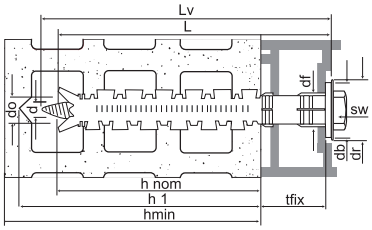


| | | | | | |
|---|---|---|---|---|---|
| d | = | screw diameter | hmin | = | minimum support thickness |
| db | = | rim diameter | hnom | = | nominal embedment depth |
| df | = | hole diameter of fixing element | L | = | anchor length |
| do | = | hole diameter | Lv | = | screw length |
| dr | = | head screw diameter | sw | = | wrench |
| h1 | = | minimum hole depth | tfix | = | fixture thickness |

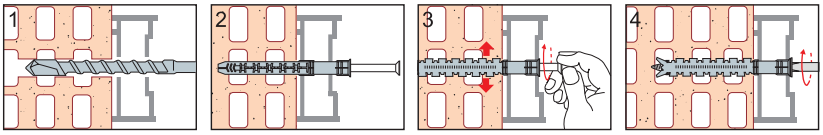


## DESIGN[1] AND RECOMMENDED[2] LOADS

### Single anchor with large anchor spacing and edge distances (Temperature = 24°C)

| Anchor | | | | Ø8 | Ø10 |
|---|---|---|---|---|---|
| Minimum hole depth | | $h_1$ | mm | 80 | 80 |
| Nominal embedment depth | | $h_{nom}$ | mm | 70 | 70 |
| Hole diameter | | $d_0$ | mm | 8 | 10 |
| Concrete C12/C15 | Tensile/Shear | $F_{rd}$ | kN | 0,84 | 1,40 |
| | | F | kN | 0,60 | 1,00 |
| | Edge distance | $C_{cr,N}$ | mm | 140 | 140 |
| | Minimum spacing | $S_{min}$ | mm | 80 | 80 |
| | Minimum edge distance | $C_{min}$ | mm | 80 | 80 |
| Concrete C16/C20 | Tensile/Shear | $F_{rd}$ | kN | 1,40 | 1,90 |
| | | F | kN | 1,00 | 1,40 |
| | Edge distance | $C_{cr,N}$ | mm | 100 | 100 |
| | Minimum spacing | $S_{min}$ | mm | 60 | 60 |
| | Minimum edge distance | $C_{min}$ | mm | 60 | 60 |
| Autoclaved Aereated Concrete AAC EN771-4 ρ=0,5kg/dm³ fb >= 2,5MPa | Tensile/Shear | $F_{rd}$ | kN | 0,30 | 0,30 |
| | | F | kN | 0,21 | 0,21 |
| | Edge distance | $C_{cr,N}$ | mm | 100 | 100 |
| | Minimum spacing | $S_{min}$ | mm | 60 | 60 |
| | Minimum edge distance | $C_{min}$ | mm | 60 | 60 |
| Minimum support thickness | | $h_{min}$ | mm | 100 | 100 |
| Solid brick EN771-1 fb >= 28MPa | Tensile/Shear | $F_{rd}$ | kN | 1,40 | 1,40 |
| | | F | kN | 1,00 | 1,00 |
| Hollow clay brick double EN771-1 fb>= 28MPa | Tensile/Shear | $F_{rd}$ | kN | 0,60 | 0,60 |
| | | F | kN | 0,43 | 0,43 |
| Hollow brick - Alveolater EN771-1 fb>= 13MPa | Tensile/Shear | $F_{rd}$ | kN | 0,6 | 0,6 |
| | | F | kN | 0,43 | 0,43 |
| Hollow brick - Alveolater 35 EN771-1 fb>= 10MPa | Tensile/Shear | $F_{rd}$ | kN | 0,6 | 0,6 |
| | | F | kN | 0,43 | 0,43 |
| Hollow brick - Light EN771-1 fb >= 7MPa | Tensile/Shear | $F_{rd}$ | kN | 0,36 | 0,36 |
| | | F | kN | 0,26 | 0,26 |
| Hollow brick - Poroton 25x30x19 EN771-1 fb >= 22MPa | Tensile/Shear | $F_{rd}$ | kN | 0,6 | 0,8 |
| | | F | kN | 0,43 | 0,57 |
| Minimum support thickness on masonry | | $h_{min}$ | mm | 110 | 110 |
| Minimum spacing on masonry | | $S_{min}$ | mm | 100 | 100 |
| Minimum edge distance on masonry | | $C_{min}$ | mm | 250 | 250 |
| Max torque on concrete support | zincplated / NAUTILUS screw | $T_{max}$ | Nm | 9 | 15 |
| | stainless steel screw | $T_{max}$ | Nm | 10 | 20 |

[1] The design loads $F_{rd}$ derive from the characteristic loads on the ETA 10/0425 certification and are inclusive of the partial safety factors $\gamma_m$ proportional to each diameter (see ETA).
[2] The recommended loads F derive from the characteristic loads on the ETA 10/0425 certification and are inclusive of the partial safety factors $\gamma_f$=1.4 and $\gamma_m$ proportional to each diameter (see ETA).
NOTE: The torque has to be regulated according to the type of installation and base material. The load values are only valid if the installation has been carried out correctly. The design engineer is responsible for the designing and calculation of the fixing, see ETAG 020 annex C.

1kN = 100 kgf

**VERSIONS:**
- plug with white zinc plated or stainless steel A4 countersunk screw
- plug with white zinc plated or stainless steel A4 hex head screw
- large rim plug with white zinc plated or stainless steel A4 hex head screw

**PRODUCT FEATURES:**
- nylon plug with multi-expansion variable geometry
- screw always preassembled
- CE certification for guaranteed safety

**BASE MATERIALS:**

- concrete
- solid brick
- honeycomb brick
- cell like clay brick
- light weight honeycomb brick
- hollow dense aggregate block
- hollow light aggregate block
- aerated concrete
- solid stone

● suitable applications ◒ partially suitable applications

ETA 10/0425

FIRE RESISTANCE F90

**Assembled**
**countersunk head screw**
**Ø 8 Torx T-30 recess**
**Ø10 Torx T-40 recess**

| White zinc plated Code | Stainless steel A4 Code | Plug do x L mm | Screw d x Lv mm | tfix mm | df mm | sw | Pkg. | Outer box |
|---|---|---|---|---|---|---|---|---|
| 64301b08080 | 64301008080 | 8x80 | 6x85 | 10 | 8,5 | T-30 | 100 | 1000 |
| 64301b08100 | 64301008100 | 8x100 | 6x105 | 30 | 8,5 | T-30 | 50 | 500 |
| 64301b08120 | 64301008120 | 8x120 | 6x125 | 50 | 8,5 | T-30 | 50 | 500 |
| 64301b08150 | 64301008150 | 8x150 | 6x155 | 80 | 8,5 | T-30 | 50 | 200 |
| 64301b08170 | 64301008170 | 8x170 | 6x175 | 100 | 8,5 | T-30 | 50 | 200 |
| 64301b10085 | 64301010085 | 10x85 | 7x90 | 15 | 10,5 | T-40 | 50 | 500 |
| 64301b10100 | 64301010100 | 10x100 | 7x105 | 30 | 10,5 | T-40 | 50 | 500 |
| 64301b10115 | 64301010115 | 10x115 | 7x120 | 45 | 10,5 | T-40 | 50 | 500 |
| 64301b10135 | 64301010135 | 10x135 | 7x140 | 65 | 10,5 | T-40 | 50 | 500 |
| 64301b10160 | 64301010160 | 10x160 | 7x165 | 90 | 10,5 | T-40 | 50 | 200 |
| 64301b10200 | 64301010200 | 10x200 | 7x205 | 130 | 10,5 | T-40 | 50 | 200 |
| 64301b10230 | 64301010230 | 10x230 | 7x235 | 160 | 10,5 | T-40 | 50 | 200 |

**Assembled**
**special hex head screw with built-in washer Ø19**
**wrench 13, Torx T-40 recess**

| White zinc plated Code | Stainless steel A4 Code | Plug do x L mm | Screw d x Lv mm | dr mm | tfix mm | df mm | sw mm | Pkg. | Outer box |
|---|---|---|---|---|---|---|---|---|---|
| 64302b10085 | 64302010085 | 10x85 | 7x90 | 19 | 15 | 10,5 | 13 T-40 | 50 | 500 |
| 64302b10100 | 64302010100 | 10x100 | 7x105 | 19 | 30 | 10,5 | 13 T-40 | 50 | 500 |
| 64302b10115 | 64302010115 | 10x115 | 7x120 | 19 | 45 | 10,5 | 13 T-40 | 50 | 500 |
| 64302b10135 | 64302010135 | 10x135 | 7x140 | 19 | 65 | 10,5 | 13 T-40 | 50 | 400 |
| 64302b10160 | 64302010160 | 10x160 | 7x165 | 19 | 90 | 10,5 | 13 T-40 | 50 | 200 |

**Assembled**
**plug with large rim Ø18**
**special hex head screw with built-in washer Ø19**
**wrench 13, Torx T-40 recess**

| White zinc plated Code | Stainless steel A4 Code | Plug do x L mm | db mm | Screw d x Lv mm | dr mm | tfix mm | df mm | sw mm | Pkg. | Outer box |
|---|---|---|---|---|---|---|---|---|---|---|
| 64402b10085 | 64402010085 | 10x85 | 18 | 7x90 | 19 | 15 | 10,5 | 13 T-40 | 50 | 500 |
| 64402b10100 | 64402010100 | 10x100 | 18 | 7x105 | 19 | 30 | 10,5 | 13 T-40 | 50 | 500 |
| 64402b10115 | 64402010115 | 10x115 | 18 | 7x120 | 19 | 45 | 10,5 | 13 T-40 | 50 | 500 |
| 64402b10135 | 64402010135 | 10x135 | 18 | 7x140 | 19 | 65 | 10,5 | 13 T-40 | 50 | 400 |
| 64402b10160 | 64402010160 | 10x160 | 18 | 7x165 | 19 | 90 | 10,5 | 13 T-40 | 50 | 200 |

# FM-X5®

## Multi-expansion long plug

**VERSIONS:**

- plug with NAUTILUS anti-corrosion coating countersunk screw
- plug with NAUTILUS anti-corrosion coating hex head screw
- large rim plug with NAUTILUS anti-corrosion coating hex head screw

**PRODUCT FEATURES:**

- nylon plug with multi-expansion variable geometry
- screw always preassembled
- CE certification for guaranteed safety

**BASE MATERIALS:**

- ● concrete
- ● solid brick
- ● honeycomb brick
- ● cell like clay brick
- ● light weight honeycomb brick
- ● hollow dense aggregate block
- ● hollow light aggregate block
- ● aerated concrete
- ● solid stone

● suitable applications ◓ partially suitable applications

ETA 10/0425

FIRE RESISTANCE F90

NAUTILUS 1000 h

**Special anti-corrosion coating with matte finish - 1000 hours in salt spray test**

**Assembled**
**countersunk head screw**
**Ø 8 Torx T-30 recess**
**Ø10 Torx T-40 recess**

| Code | Plug do x L mm | Screw d x Lv mm | tfix mm | df mm | sw | Pkg. | Outer box |
|---|---|---|---|---|---|---|---|
| 64301c08080▲ | 8x80 | 6x85 | 10 | 8,5 | T-30 | 100 | 1000 |
| 64301c08100▲ | 8x100 | 6x105 | 30 | 8,5 | T-30 | 50 | 500 |
| 64301c08120▲ | 8x120 | 6x125 | 50 | 8,5 | T-30 | 50 | 500 |
| 64301c08150▲ | 8x150 | 6x155 | 80 | 8,5 | T-30 | 50 | 200 |
| 64301c08170▲ | 8x170 | 6x175 | 100 | 8,5 | T-30 | 50 | 200 |
| 64301c10085▲ | 10x85 | 7x90 | 15 | 10,5 | T-40 | 50 | 500 |
| 64301c10100▲ | 10x100 | 7x105 | 30 | 10,5 | T-40 | 50 | 500 |
| 64301c10115▲ | 10x115 | 7x120 | 45 | 10,5 | T-40 | 50 | 500 |
| 64301c10135▲ | 10x135 | 7x140 | 65 | 10,5 | T-40 | 50 | 500 |
| 64301c10160▲ | 10x160 | 7x165 | 90 | 10,5 | T-40 | 50 | 200 |
| 64301c10200▲ | 10x200 | 7x205 | 130 | 10,5 | T-40 | 50 | 200 |
| 64301c10230▲ | 10x230 | 7x235 | 160 | 10,5 | T-40 | 50 | 200 |

**Assembled**
**special hex head screw with built-in washer Ø19**
**wrench 13, Torx T-40 recess**

| Code | Plug do x L mm | Screw d x Lv mm | dr mm | tfix mm | df mm | sw mm | Pkg. | Outer box |
|---|---|---|---|---|---|---|---|---|
| 64302c10085▲ | 10x85 | 7x90 | 19 | 15 | 10,5 | 13 T-40 | 50 | 500 |
| 64302c10100▲ | 10x100 | 7x105 | 19 | 30 | 10,5 | 13 T-40 | 50 | 500 |
| 64302c10115▲ | 10x115 | 7x120 | 19 | 45 | 10,5 | 13 T-40 | 50 | 500 |
| 64302c10135▲ | 10x135 | 7x140 | 19 | 65 | 10,5 | 13 T-40 | 50 | 400 |
| 64302c10160▲ | 10x160 | 7x165 | 19 | 90 | 10,5 | 13 T-40 | 50 | 200 |

**Assembled**
**plug with large rim Ø18**
**special hex head screw with built-in washer Ø19**
**wrench 13, Torx T-40 recess**

| Code | Plug do x L mm | db mm | Screw d x Lv mm | dr mm | tfix mm | df mm | sw mm | Pkg. | Outer box |
|---|---|---|---|---|---|---|---|---|---|
| 64402c10085▲ | 10x85 | 18 | 7x90 | 19 | 15 | 10,5 | 13 T-40 | 50 | 500 |
| 64402c10100▲ | 10x100 | 18 | 7x105 | 19 | 30 | 10,5 | 13 T-40 | 50 | 500 |
| 64402c10115▲ | 10x115 | 18 | 7x120 | 19 | 45 | 10,5 | 13 T-40 | 50 | 500 |
| 64402c10135▲ | 10x135 | 18 | 7x140 | 19 | 65 | 10,5 | 13 T-40 | 50 | 400 |
| 64402c10160▲ | 10x160 | 18 | 7x165 | 19 | 90 | 10,5 | 13 T-40 | 50 | 200 |

▲ Quantity and delivery terms to be agreed

# Long nylon high expansion plug

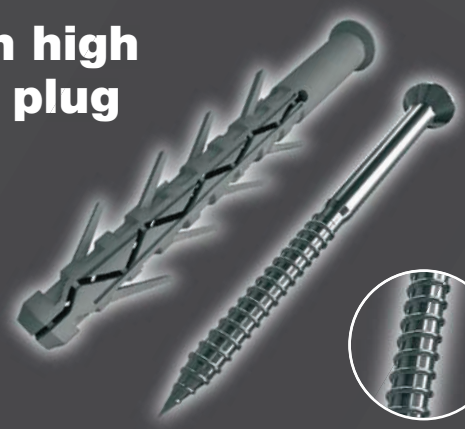

**TOP PERFORMANCE**
**The internal and external design generates increased expansion**

**CONTROLLED EXPANSION**
**The locating groove in the plug ensures a correct positioning of the screw during installation**

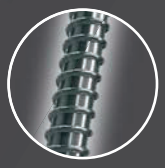

**ROUNDED THREAD SCREW**
**Prevents internal damage to the plug**

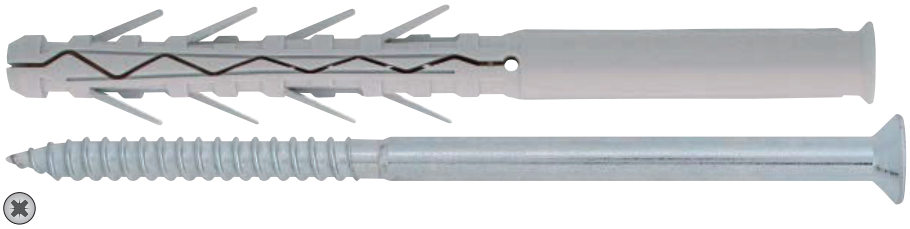

**Countersunk head screw**
**white zinc plated**
**Ø 8 Pozidrive n°3 recess**
**Ø10 Pozidrive n°4 recess**

| Code | Plug do x L mm | Screw d x Lv mm | tfix mm | df mm | Pkg. | Outer box |
|---|---|---|---|---|---|---|
| 64102b08080 | 8x80 | 5,5x85 | 10 | 8 | 100 | 1000 |
| 64102b08100 | 8x100 | 5,5x105 | 30 | 8 | 50 | 500 |
| 64102b08120 | 8x120 | 5,5x125 | 50 | 8 | 50 | 500 |
| 64102b10085 | 10x85 | 7x90 | 15 | 10 | 100 | 1000 |
| 64102b10100 | 10x100 | 7x105 | 30 | 10 | 50 | 500 |
| 64102b10115 | 10x115 | 7x120 | 45 | 10 | 50 | 500 |
| 64102b10135 | 10x135 | 7x140 | 65 | 10 | 50 | 500 |
| 64102b10160 | 10x160 | 7x165 | 90 | 10 | 50 | 500 |
| 64102b10200 | 10x200 | 7x205 | 130 | 10 | 50 | 250 |

**Countersunk head screw**
**Ø 8 Torx T-30 recess**
**Ø10 Torx T-40 recess**

| White zinc plated Code | Stainless steel A4 Code | Plug do x L mm | Screw d x Lv mm | tfix mm | df mm | Pkg. | Outer box |
|---|---|---|---|---|---|---|---|
| 64103b08080 | 64103008080 | 8x80 | 5,5x85 | 10 | 8 | 100 | 1000 |
| 64103b08100 | 64103008100 | 8x100 | 5,5x105 | 30 | 8 | 50 | 500 |
| 64103b08120 | 64103008120 | 8x120 | 5,5x125 | 50 | 8 | 50 | 500 |
| 64103b10085 | 64103010085 | 10x85 | 7x90 | 15 | 10 | 100 | 1000 |
| 64103b10100 | 64103010100 | 10x100 | 7x105 | 30 | 10 | 50 | 500 |
| 64103b10115 | 64103010115 | 10x115 | 7x120 | 45 | 10 | 50 | 500 |
| 64103b10135 | 64103010135 | 10x135 | 7x140 | 65 | 10 | 50 | 500 |
| 64103b10160 | 64103010160 | 10x160 | 7x165 | 90 | 10 | 50 | 500 |
| 64103b10200 | 64103010200 | 10x200 | 7x205 | 130 | 10 | 50 | 250* |

*500 for Stainless steel A4

**Hex head screw**

| White zinc plated Code | Stainless steel A4 Code | Plug do x L mm | Screw d x Lv mm | tfix mm | df mm | sw | Pkg. | Outer box |
|---|---|---|---|---|---|---|---|---|
| 64101b08080 | 64101008080 | 8x80 | 5,5x85 | 10 | 8 | 10 | 100 | 1000 |
| 64101b08100 | 64101008100 | 8x100 | 5,5x105 | 30 | 8 | 10 | 50 | 500 |
| 64101b08120 | 64101008120 | 8x120 | 5,5x125 | 50 | 8 | 10 | 50 | 500 |
| 64101b10085 | 64101010085 | 10x85 | 7x90 | 15 | 10 | 13 | 100 | 1000 |
| 64101b10100 | 64101010100 | 10x100 | 7x105 | 30 | 10 | 13 | 50 | 500 |
| 64101b10115 | 64101010115 | 10x115 | 7x120 | 45 | 10 | 13 | 50 | 500 |
| 64101b10135 | | 10x135 | 7x140 | 65 | 10 | 13 | 50 | 500 |
| 64101b10160 | 64101010160 | 10x160 | 7x165 | 90 | 10 | 13 | 50 | 500 |
| 64101b10200 | | 10x200 | 7x205 | 130 | 10 | 13 | 50 | 250 |
| 64101b12135 | | 12x135 | 10x140 | 65 | 12 | 17 | 25 | 250 |
| 64101b12160 | | 12x160 | 10x165 | 90 | 12 | 17 | 25 | 250 |
| 64101b12200 | | 12x200 | 10x205 | 130 | 12 | 17 | 25 | 250 |
| 64101b12240 | | 12x240 | 10x245 | 170 | 12 | 17 | 25 | 250 |

**VERSIONS:**
- plug with white zinc plated Pozidrive countersunk screw
- plug with white zinc plated or stainless steel A4 Torx countersunk screw
- plug with white zinc plated or stainless steel A4 hex head screw

**PRODUCT FEATURES:**
- nylon plug
- various types of screws for different types of fixing requirements
- large fixing thickness

**BASE MATERIALS:**

- ● concrete
- ● solid brick
- ● honeycomb brick
- ◒ cell like clay brick
- ● light weight honeycomb brick
- ◒ hollow dense aggregate block
- ◒ hollow light aggregate block
- ● aerated concrete
- ● solid stone

● suitable applications ◒ partially suitable applications

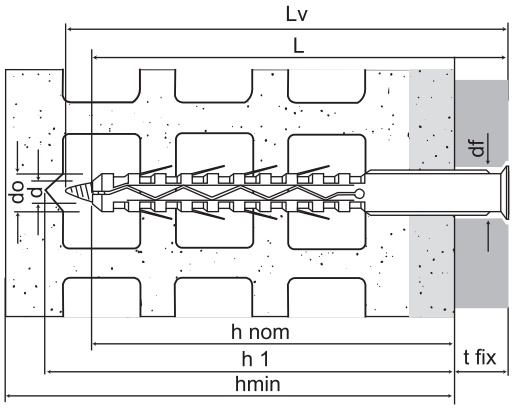


| | | | | | |
|---|---|---|---|---|---|
| d | = | screw diameter | sw | = | wrench |
| df | = | hole diameter of fixing element | tfix | = | fixture thickness |
| do | = | hole diameter | | | |
| h1 | = | minimum hole depth | | | |
| hmin | = | minimum support thickness | | | |
| hnom | = | nominal embedment depth | | | |
| L | = | anchor length | | | |
| Lv | = | screw length | | | |

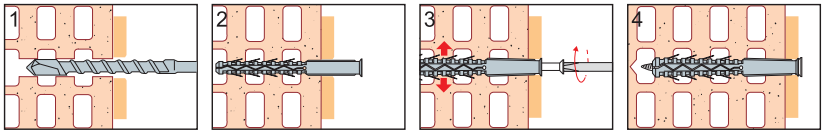


## DESIGN AND RECOMMENDED[1] LOADS

### Single anchor with large anchor spacing and edge distances

| Anchor | | | | Ø8 | Ø10 | Ø12 |
|---|---|---|---|---|---|---|
| Minimum support thickness | | $h_{min}$ | mm | 125 | 125 | 125 |
| Minimum hole depth | | $h_1$ | mm | 80 | 80 | 80 |
| Nominal embedment depth | | $h_{nom}$ | mm | 70 | 70 | 70 |
| Hole diameter | | $d_0$ | mm | 8 | 10 | 12 |
| Concrete C20/C25 | Tensile | $N_{rd}$ | kN | 1,7 | 1,8 | 2,8 |
| | | N | kN | 1,2 | 1,3 | 2,0 |
| | Shear | $V_{rd}$ | kN | 1,7 | 2,1 | 2,8 |
| | | V | kN | 1,2 | 1,5 | 2,0 |
| Cell like clay brick[2] | Tensile | $N_{rd}$ | kN | 0,17 | 0,21 | 0,56 |
| | | N | kN | 0,12 | 0,15 | 0,4 |
| | Shear | $V_{rd}$ | kN | 0,21 | 0,28 | 0,7 |
| | | V | kN | 0,15 | 0,2 | 0,5 |
| Hollow clay brick double UNI[2] | Tensile | $N_{rd}$ | kN | 0,35 | 0,5 | 1,0 |
| | | N | kN | 0,25 | 0,35 | 0,7 |
| | Shear | $V_{rd}$ | kN | 1,1 | 1,4 | 1,8 |
| | | V | kN | 0,8 | 1 | 1,3 |
| Spacing[3] | | S | mm | 105 | 105 | 105 |
| Edge distance[3] | | C | mm | 105 | 105 | 105 |

1kN = 100 kgf

[1] The recommended loads derive from the mean ultimate loads and are inclusive of the total safety factor $\gamma$=6.

[2] Base material with plaster thickness around 10÷15 mm.

[3] In case of broken bricks double the distances of the indicative data.

NOTE: The torque has to be regulated according to the type of installation and base material.

In the absence of CE markings, the recommended loads derive from tests carried out in the Friulsider laboratory in accordance with the appropriate standards.

The load values are only valid if the installation has been carried out correctly. The design engineer is responsible for the designing and calculation of the fixing.

# The absolute plug

patent pending

**COLLAPSIBLE RIM**
**The X1 rim is designed to fold over on itself, allowing both a through or pre-positioned fixing**

**EXTRA THIN COUNTERSUNK RIM**
**Two plugs in one: rimmed and rimless**

**DYNAMIC GEOMETRY AND DIFFERENTIATED EXPANSION**
**Maxi dynamic anti-rotation wings guarantee blocking of plug, in any condition of use.**

**Nylon plug only**

| Code | Plug do x L mm | Per box Pkg. | Per box Outer box | Bulk Outer box |
|---|---|---|---|---|
| 60070005025 | 5x25 | 100 | 3200 | 15000 |
| 60070006030 | 6x30 | 100 | 3200 | 10000 |
| 60070008040 | 8x40 | 100 | 1600 | 4000 |
| 60070010050 | 10x50 | 50 | 800 | 2000 |
| 60070012060* | 12x60 | 25 | 400 | |
| 60070014070* | 14x70 | 20 | 320 | |

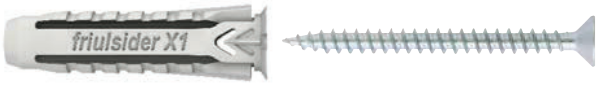


**Chipboard screw**
**white zinc plated**
**Pozidrive recess**

| Code | Plug do x L mm | Screw d x Lv mm | tfix mm | Pkg. | Outer box |
|---|---|---|---|---|---|
| 60071b05025 | 5x25 | 4x30 | 1,5 | 100 | 3200 |
| 60071b06030 | 6x30 | 4,5x40 | 5 | 100 | 1600 |
| 60071b08040 | 8x40 | 5x50 | 5 | 50 | 800 |
| 60071b10050 | 10x50 | 6x60 | 5 | 25 | 400 |

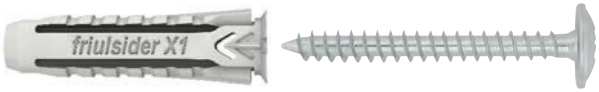


**Wide rounded head chipboard screw**
**white zinc plated**
**Pozidrive recess**

| Code | Plug do x L mm | Screw d x Lv mm | tfix mm | Pkg. | Outer box |
|---|---|---|---|---|---|
| 60072b05025 | 5x25 | 3,5x30 | 1,5 | 100 | 1600 |
| 60072b06030 | 6x30 | 4,5x40 | 5 | 100 | 1200 |
| 60072b08040 | 8x40 | 5x50 | 5 | 50 | 600 |

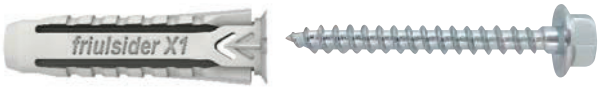


**Wood hex head screw**
**with built-in washer Ø15**
**white zinc plated**

| Code | Plug do x L mm | Screw d x Lv mm | tfix mm | sw | Pkg. | Outer box |
|---|---|---|---|---|---|---|
| 60073b08040 | 8x40 | 6x50 | 5 | 10 | 100 | 600 |
| 60073b10050 | 10x50 | 6x60 | 5 | 10 | 100 | 400 |
| 60073b12060* | 12x60 | 8x70 | 5 | 13 | 50 | 200 |
| 60073b14070* | 14x70 | 10x80 | 5 | 17 | 25 | 150 |

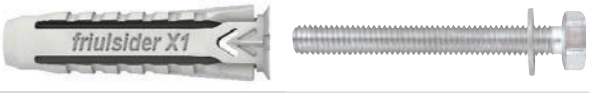


**Metric hex head screw and washer**
**white zinc plated**

| Code | Plug do x L mm | Screw d x Lv mm | tfix mm | sw | Washer Ø | Pkg. | Outer box |
|---|---|---|---|---|---|---|---|
| 60074b06030 | 6x30 | M4x40 | 5 | 7 | 4,3x9 | 100 | 1600 |
| 60074b08040 | 8x40 | M5x50 | 5 | 8 | 5,3x10 | 50 | 800 |
| 60074b10050 | 10x50 | M6x60 | 5 | 10 | 6,4x12 | 25 | 400 |
| 60074b12060* | 12x60 | M8x70 | 70 | 13 | 8,4x16 | 25 | 200 |
| 60074b14070* | 14x70 | M10x80 | 80 | 17 | 10,5x20 | 20 | 160 |

* Sizes available from September 2013. For further information please contact export@friulsider.com

## WORKS ON ALL BASE MATERIALS

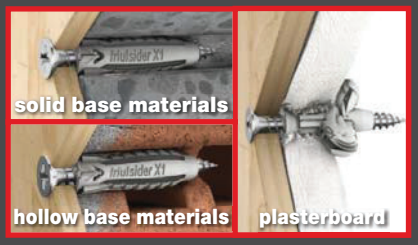


## SUITABLE FOR ALL TYPES OF SCREWS

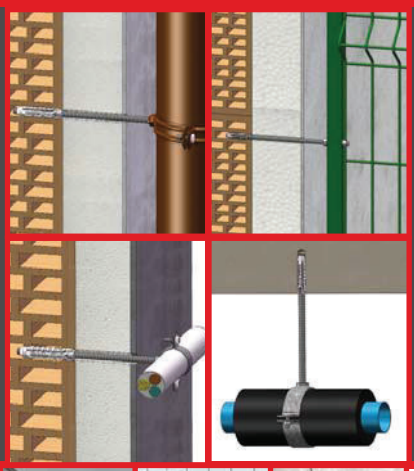

## BASE MATERIALS:

- concrete
- solid brick
- honeycomb brick
- cell like clay brick
- light weight honeycomb brick
- hollow dense aggregate block
- hollow light aggregate block
- aerated concrete
- plasterboard
- solid stone

● suitable applications ◓ partially suitable applications

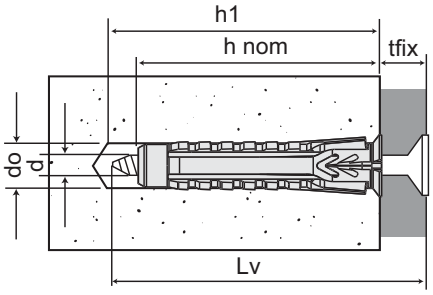


| | | | | | |
|---|---|---|---|---|---|
| d | = | screw diameter | L | = | anchor length |
| do | = | hole diameter | Lv | = | screw length |
| h1 | = | minimum hole depth | tfix | = | fixture thickness |
| hnom | = | nominal embedment depth | Tinst | = | torque |

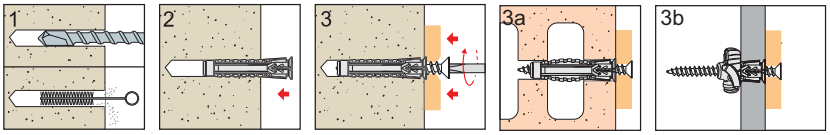


# DESIGN AND RECOMMENDED[1] LOADS

## Single anchor with large anchor spacing and edge distances

| Anchor | | | | Ø5x25 | | | | Ø6x30 | | | | | | Ø8x40 | | | | | | Ø10x50 | | | | | |
|---|---|---|---|---|---|---|---|---|---|---|---|---|---|---|---|---|---|---|---|---|---|---|---|---|---|
| Minimum hole depth | | $h_1$ | mm | 35 | | | | 40 | | | | | | 50 | | | | | | 60 | | | | | |
| Nominal emb. depth | | $h_{nom}$ | mm | 25 | | | | 30 | | | | | | 40 | | | | | | 50 | | | | | |
| Hole diameter | | $d_0$ | mm | 5 | | | | 6 | | | | | | 8 | | | | | | 10 | | | | | |
| Diameter and type of screw | | d | mm | Chip. Ø3 | Chip. Ø3,5 | Chip. Ø4 | Wood Ø4 | Chip. Ø4 | Chip. Ø4,5 | Chip. Ø5 | Wood Ø4 | Wood Ø5 | Metr. M4 | Chip. Ø4,5 | Chip. Ø5 | Chip. Ø6 | Wood Ø5 | Wood Ø6 | Metr. M5 | Chip. Ø6 | Chip. Ø8 | Wood Ø6 | Wood Ø7 | Wood Ø8 | Metr. M6 |
| Concrete C20/C25[2] | Tensile | $N_{rd}$ | kN | 0,14 | 0,20 | 0,32 | 0,33 | 0,12 | 0,25 | 0,42 | 0,28 | 0,47 | 0,25 | 0,26 | 0,49 | 0,73 | 0,56 | 0,84 | 0,35 | 0,7 | 1,65 | 0,87 | 1,74 | 1,74 | 0,77 |
| | Shear | N | kN | 0,1 | 0,14 | 0,23 | 0,24 | 0,09 | 0,18 | 0,3 | 0,2 | 0,34 | 0,18 | 0,19 | 0,35 | 0,52 | 0,4 | 0,6 | 0,25 | 0,5 | 1,18 | 0,62 | 1,24 | 1,24 | 0,55 |
| | Tensile | $V_{rd}$ | kN | 0,21 | 0,35 | 0,42 | 0,56 | 0,25 | 0,35 | 0,63 | 0,35 | 0,7 | 0,35 | 0,35 | 0,7 | 1,05 | 0,7 | 1,12 | 0,42 | 1 | 1,54 | 1,05 | 1,54 | 1,96 | 0,91 |
| | Shear | V | kN | 0,15 | 0,25 | 0,3 | 0,4 | 0,18 | 0,25 | 0,45 | 0,25 | 0,5 | 0,25 | 0,25 | 0,5 | 0,75 | 0,5 | 0,8 | 0,3 | 0,7 | 1,1 | 0,75 | 1,1 | 1,4 | 0,65 |
| Solid brick[2] | Tensile | $N_{rd}$ | kN | 0,18 | 0,22 | 0,35 | 0,42 | 0,15 | 0,31 | 0,45 | 0,31 | 0,63 | 0,31 | 0,21 | 0,36 | 0,78 | 0,59 | 1 | 0,49 | 0,84 | 1,75 | 1,12 | 1,75 | 2,24 | 1 |
| | Shear | N | kN | 0,13 | 0,16 | 0,25 | 0,3 | 0,11 | 0,22 | 0,32 | 0,22 | 0,45 | 0,22 | 0,15 | 0,26 | 0,56 | 0,42 | 0,7 | 0,35 | 0,6 | 1,25 | 0,8 | 1,25 | 1,6 | 0,7 |
| | Tensile | $V_{rd}$ | kN | 0,21 | 0,28 | 0,42 | 0,56 | 0,25 | 0,35 | 0,63 | 0,35 | 0,7 | 0,35 | 0,28 | 0,49 | 1,05 | 0,7 | 1,26 | 0,56 | 1,12 | 1,54 | 1,4 | 1,54 | 1,96 | 1,12 |
| | Shear | V | kN | 0,15 | 0,2 | 0,3 | 0,4 | 0,18 | 0,25 | 0,45 | 0,25 | 0,5 | 0,25 | 0,2 | 0,35 | 0,75 | 0,5 | 0,9 | 0,4 | 0,8 | 1,1 | 1 | 1,1 | 1,4 | 0,8 |
| Cell like clay brick[3] | Tensile | $N_{rd}$ | kN | 0,1 | 0,11 | 0,15 | 0,22 | 0,11 | 0,21 | 0,35 | 0,26 | 0,39 | 0,25 | 0,21 | 0,29 | 0,56 | 0,38 | 0,56 | 0,42 | 0,42 | 0,84 | 0,56 | 0,84 | 0,91 | 0,59 |
| | Shear | N | kN | 0,07 | 0,08 | 0,11 | 0,16 | 0,08 | 0,15 | 0,25 | 0,19 | 0,28 | 0,18 | 0,15 | 0,21 | 0,4 | 0,27 | 0,4 | 0,3 | 0,3 | 0,6 | 0,4 | 0,6 | 0,65 | 0,42 |
| | Tensile | $V_{rd}$ | kN | 0,14 | 0,14 | 0,20 | 0,28 | 0,17 | 0,28 | 0,42 | 0,28 | 0,45 | 0,28 | 0,25 | 0,35 | 0,7 | 0,45 | 0,63 | 0,49 | 0,56 | 0,84 | 0,63 | 1 | 1 | 0,7 |
| | Shear | V | kN | 0,1 | 0,1 | 0,14 | 0,2 | 0,12 | 0,2 | 0,3 | 0,2 | 0,32 | 0,2 | 0,18 | 0,25 | 0,5 | 0,32 | 0,45 | 0,35 | 0,4 | 0,6 | 0,45 | 0,7 | 0,7 | 0,5 |
| Hollow clay brick double UNI[3] | Tensile | $N_{rd}$ | kN | 0,15 | 0,20 | 0,22 | 0,29 | 0,12 | 0,25 | 0,42 | 0,26 | 0,47 | 0,25 | 0,21 | 0,29 | 0,59 | 0,38 | 0,7 | 0,42 | 0,42 | 0,84 | 0,59 | 0,91 | 0,91 | 0,91 |
| | Shear | N | kN | 0,11 | 0,14 | 0,16 | 0,21 | 0,09 | 0,18 | 0,3 | 0,19 | 0,34 | 0,18 | 0,15 | 0,21 | 0,42 | 0,27 | 0,5 | 0,3 | 0,3 | 0,6 | 0,42 | 0,65 | 0,65 | 0,42 |
| | Tensile | $V_{rd}$ | kN | 0,21 | 0,22 | 0,28 | 0,39 | 0,18 | 0,35 | 0,56 | 0,28 | 0,56 | 0,28 | 0,28 | 0,35 | 0,7 | 0,45 | 0,84 | 0,49 | 0,56 | 0,84 | 0,84 | 1,05 | 1 | 0,7 |
| | Shear | V | kN | 0,15 | 0,16 | 0,2 | 0,28 | 0,13 | 0,25 | 0,4 | 0,2 | 0,4 | 0,2 | 0,2 | 0,25 | 0,5 | 0,32 | 0,6 | 0,35 | 0,4 | 0,6 | 0,6 | 0,75 | 0,7 | 0,5 |
| Plasterboard 12.5 mm | Tensile | $N_{rd}$ | kN | 0,56 | 0,56 | 0,56 | 0,56 | 0,07 | 0,07 | 0,07 | 0,07 | 0,07 | 0,07 | 0,11 | 0,11 | 0,11 | 0,11 | 0,11 | 0,11 | 0,14 | 0,14 | 0,14 | 0,14 | 0,14 | 0,14 |
| | Shear | N | kN | 0,04 | 0,04 | 0,04 | 0,04 | 0,05 | 0,05 | 0,05 | 0,05 | 0,05 | 0,05 | 0,08 | 0,08 | 0,08 | 0,08 | 0,08 | 0,08 | 0,1 | 0,1 | 0,1 | 0,1 | 0,1 | 0,1 |
| | Tensile | $V_{rd}$ | kN | 0,1 | 0,1 | 0,1 | 0,11 | 0,1 | 0,1 | 0,1 | 0,1 | 0,1 | 0,08 | 0,14 | 0,14 | 0,14 | 0,14 | 0,14 | 0,14 | 0,17 | 0,17 | 0,17 | 0,17 | 0,17 | 0,17 |
| | Shear | V | kN | 0,07 | 0,07 | 0,07 | 0,08 | 0,07 | 0,07 | 0,07 | 0,07 | 0,07 | 0,06 | 0,1 | 0,1 | 0,1 | 0,1 | 0,1 | 0,1 | 0,12 | 0,12 | 0,12 | 0,12 | 0,12 | 0,1 |
| Aerated concrete[2] | Tensile | $N_{rd}$ | kN | 0,07 | 0,08 | 0,11 | 0,12 | 0,07 | 0,08 | 0,12 | 0,11 | 0,14 | 0,12 | 0,15 | 0,21 | 0,26 | 0,24 | 0,26 | 0,25 | 0,35 | 0,42 | 0,35 | 0,42 | 0,42 | 0,39 |
| | Shear | N | kN | 0,05 | 0,06 | 0,08 | 0,09 | 0,05 | 0,06 | 0,09 | 0,08 | 0,1 | 0,09 | 0,11 | 0,15 | 0,19 | 0,17 | 0,19 | 0,18 | 0,25 | 0,3 | 0,25 | 0,3 | 0,3 | 0,28 |
| | Tensile | $V_{rd}$ | kN | 0,11 | 0,14 | 0,14 | 0,17 | 0,11 | 0,14 | 0,17 | 0,14 | 0,18 | 0,17 | 0,18 | 0,28 | 0,31 | 0,28 | 0,32 | 0,31 | 0,42 | 0,49 | 0,42 | 0,49 | 0,49 | 0,45 |
| | Shear | V | kN | 0,08 | 0,1 | 0,1 | 0,12 | 0,08 | 0,1 | 0,12 | 0,1 | 0,13 | 0,12 | 0,13 | 0,2 | 0,22 | 0,2 | 0,23 | 0,22 | 0,3 | 0,35 | 0,3 | 0,35 | 0,35 | 0,32 |
| Edge distance [4] | | C | mm | 45 | | | | 55 | | | | | | 70 | | | | | | 90 | | | | | |
| Spacing [4] | | S | mm | 40 | | | | 55 | | | | | | 60 | | | | | | 75 | | | | | |

1kN = 100 kgf

[1] The recommended loads derive from the mean ultimate loads and are inclusive of the total safety factor $\gamma$=6.

[2] Base material without plaster.

[3] Base material with plaster thickness around 10 - 15 mm.

[4] In case of broken bricks double the distances of the indicative data.

NOTE: The torque has to be regulated according to the type of installation and base material. In the absence of CE markings, the recommended loads derive from tests carried out in the Friulsider laboratory in accordance with the appropriate standards. The load values are only valid if the installation has been carried out correctly. The design engineer is responsible for the designing and calculation of the fixing.

# Nylon plug

## Optimal expansion on all base material

### Rimmed plug

| Code | Plug do x L mm | Per box | | Per bag | | Bulk |
|---|---|---|---|---|---|---|
| | | Pkg. | Outer box | Pkg. | Outer box | Outer box |
| 60001004020* | 4x20 | 300 | 15000 | 1000 | 20000 | 30000 |
| 60001005025 | 5x25 | 100 | 5000 | 1000 | 20000 | 15000 |
| 60001006030 | 6x30 | 100 | 5000 | 1000 | 10000 | 10000 |
| 60001007035* | 7x35 | 150 | 7500 | | | 7000 |
| 60001008040 | 8x40 | 100 | 5000 | 1000 | 5000 | 4000 |
| 60001010050 | 10x50 | 50 | 2500 | 500 | 2500 | 2000 |
| 60001010060 | 10x60 | 50 | 2500 | | | 1800 |
| 60001012060* | 12x60 | 25 | 1250 | 250 | 1500 | 1200 |
| 60001014080* | 14x80 | 20 | 1000 | | | 600 |
| 60001016080* | 16x80 | 15 | 750 | | | 500 |

* Former version until end of stock

### Rimless plug

| Code | Plug do x L mm | Per box | | Per bag | | Bulk |
|---|---|---|---|---|---|---|
| | | Pkg. | Outer box | Pkg. | Outer box | Outer box |
| 60101004020* | 4x20 | 300 | 15000 | 1000 | 20000 | 30000 |
| 60101005025 | 5x25 | 100 | 5000 | 1000 | 20000 | 15000 |
| 60101006030 | 6x30 | 100 | 5000 | 1000 | 10000 | 10000 |
| 60101007035* | 7x35 | 150 | 7500 | | | 7000 |
| 60101008040 | 8x40 | 100 | 5000 | 1000 | 5000 | 4000 |
| 60101010050 | 10x50 | 50 | 2500 | 500 | 2500 | 2000 |
| 60101010060 | 10x60 | 50 | 2500 | | | 1800 |
| 60101012060* | 12x60 | 25 | 1250 | 250 | 1500 | 1200 |
| 60101014080* | 14x80 | 20 | 1000 | | | 600 |
| 60101016080* | 16x80 | 15 | 750 | | | 500 |

* Former version until end of stock

**VERSIONS:**
- rimmed plug
- rimless plug

**PRODUCT FEATURES:**
- nylon plug
- ø10 available in two different lengths

**BASE MATERIALS:**

- concrete
- solid brick
- honeycomb brick
- cell like clay brick
- light weight honeycomb brick
- hollow dense aggregate block
- hollow light aggregate block
- aerated concrete
- solid stone

● suitable applications ◒ partially suitable applications

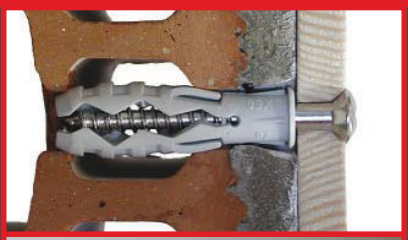

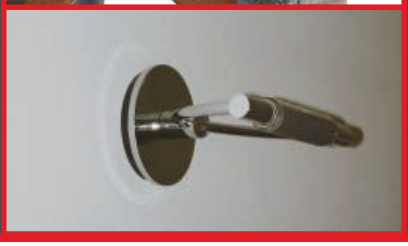

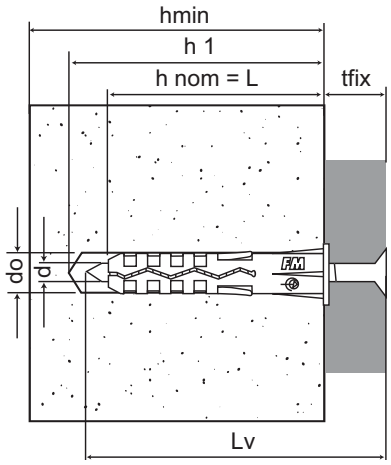


| | | | | | |
|---|---|---|---|---|---|
| d | = | screw diameter | hnom | = | nominal embedment depth |
| do | = | hole diameter | L | = | anchor length |
| h1 | = | minimum hole depth | Lv | = | screw length |
| hmin | = | minimum support thickness | tfix | = | fixture thickness |

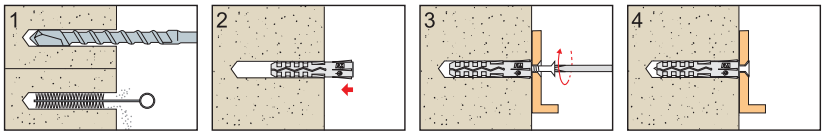


## DESIGN AND RECOMMENDED[1] LOADS

### Single anchor with large anchor spacing and edge distances

| Anchor | | | | Ø5x25 | | Ø6x30 | | | Ø8x40 | | Ø10x50 | | Ø12x60 |
|---|---|---|---|---|---|---|---|---|---|---|---|---|---|
| Minimum support thickness | | $h_{min}$ | mm | 50 | | 60 | | | 80 | | 100 | | 120 |
| Minimum hole depth | | $h_1$ | mm | 35 | | 40 | | | 50 | | 60 | | 70 |
| Nominal embedment depth | | $h_{nom}$ | mm | 25 | | 30 | | | 40 | | 50 | | 60 |
| Hole diameter | | $d_0$ | mm | 5 | | 6 | | | 8 | | 10 | | 12 |
| Diameter of chipboard screw[2] | | d | mm | **Ø3,5** | **Ø4** | **Ø4** | **Ø4,5** | **Ø5** | **Ø5** | **Ø6** | **Ø6** | **Ø8** | **Ø8** |
| Concrete C20/C25 | Tensile | $N_{rd}$ | kN | 0,25 | 0,39 | 0,35 | 0,49 | 0,63 | 0,70 | 0,98 | 0,70 | 1,82 | 1,40 |
| | | N | kN | 0,18 | 0,28 | 0,25 | 0,35 | 0,45 | 0,5 | 0,7 | 0,5 | 1,3 | 1 |
| | Shear | $V_{rd}$ | kN | 0,42 | 0,56 | 0,56 | 0,76 | 1,01 | 0,91 | 1,48 | 1,29 | 1,54 | 1,54 |
| | | V | kN | 0,3 | 0,4 | 0,4 | 0,54 | 0,72 | 0,65 | 1,06 | 0,92 | 1,1 | 1,1 |
| Solid brick | Tensile | $N_{rd}$ | kN | 0,25 | 0,35 | 0,35 | 0,49 | 0,63 | 0,63 | 0,84 | 0,70 | 1,68 | 1,01 |
| | | N | kN | 0,18 | 0,25 | 0,25 | 0,35 | 0,45 | 0,45 | 0,6 | 0,5 | 1,2 | 0,72 |
| | Shear | $V_{rd}$ | kN | 0,28 | 0,42 | 0,45 | 0,56 | 0,84 | 0,98 | 1,26 | 1,26 | 1,54 | 1,54 |
| | | V | kN | 0,2 | 0,3 | 0,32 | 0,4 | 0,6 | 0,7 | 0,9 | 0,9 | 1,1 | 1,1 |
| Autoclaved aerated concrete blocks G4 | Tensile | $N_{rd}$ | kN | 0,11 | 0,14 | 0,17 | 0,20 | 0,20 | 0,22 | 0,25 | 0,27 | 0,42 | 0,42 |
| | | N | kN | 0,08 | 0,1 | 0,12 | 0,14 | 0,14 | 0,16 | 0,18 | 0,19 | 0,3 | 0,3 |
| | Shear | $V_{rd}$ | kN | 0,17 | 0,17 | 0,22 | 0,22 | 0,25 | 0,31 | 0,42 | 0,49 | 0,70 | 0,70 |
| | | V | kN | 0,12 | 0,12 | 0,16 | 0,16 | 0,18 | 0,22 | 0,3 | 0,35 | 0,5 | 0,5 |
| Hollow clay brick double UNI[3] | Tensile | Nrd | kN | 0,17 | 0,22 | 0,28 | 0,39 | 0,56 | 0,42 | 0,56 | 0,48 | 0,84 | 0,98 |
| | | N | kN | 0,12 | 0,16 | 0,2 | 0,28 | 0,4 | 0,3 | 0,4 | 0,34 | 0,6 | 0,7 |
| | Shear | $V_{rd}$ | kN | 0,21 | 0,28 | 0,42 | 0,49 | 0,70 | 0,56 | 0,70 | 0,70 | 0,84 | 0,84 |
| | | V | kN | 0,15 | 0,2 | 0,3 | 0,35 | 0,5 | 0,4 | 0,5 | 0,5 | 0,6 | 0,6 |
| Cell like clay brick[3] | Tensile | $N_{rd}$ | kN | 0,11 | 0,20 | 0,21 | 0,24 | 0,28 | 0,31 | 0,36 | 0,42 | 0,56 | 0,63 |
| | | N | kN | 0,08 | 0,14 | 0,15 | 0,17 | 0,2 | 0,22 | 0,26 | 0,3 | 0,4 | 0,45 |
| | Shear | $V_{rd}$ | kN | 0,14 | 0,22 | 0,28 | 0,35 | 0,35 | 0,35 | 0,42 | 0,56 | 0,70 | 0,70 |
| | | V | kN | 0,1 | 0,16 | 0,2 | 0,25 | 0,25 | 0,25 | 0,3 | 0,4 | 0,5 | 0,5 |
| Spacing[4] | | S | mm | 40 | | 55 | | | 60 | | 75 | | 90 |
| Edge distance[4] | | C | mm | 45 | | 55 | | | 70 | | 90 | | 105 |

1kN = 100 kgf

[1] The recommended loads derive from the mean ultimate loads and are inclusive of the total safety factor $\gamma$=6.

[2] The screw must protrude out of the plug by at least 1 diameter.

[3] Base material with plaster thickness around 10÷15 mm.

[4] In case of broken bricks double the distances of the indicative data.

NOTE: The torque has to be regulated according to the type of installation and base material.

In the absence of CE markings, the recommended loads derive from tests carried out in the Friulsider laboratory in accordance with the appropriate standards.

The load values are only valid if the installation has been carried out correctly. The design engineer is responsible for the designing and calculation of the fixing.

# Countersunk preassembled nylon plug

**CE CERTIFIED**
**For guaranteed performances**

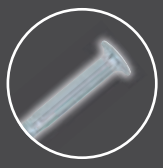

**COUNTERSUNK RIM**
**For roofing professionals**

**INNOVATIVE GEOMETRY**
**Controlled expansion**
**Optimal performance in all conditions**

ETA 10/0190

**Pozidrive recess screw grey plug**

| White zinc plated Code | Stainless steel A2 Code | Plug do x L mm | Screw d x Lv mm | tfix | Pkg. | Outer box |
|---|---|---|---|---|---|---|
| 62200b05030* | 62203x05030*▲ | 5x30 | 3,4x35 | 5 | 300 | 3000 |
| 62200b05040* | 62203x05040*▲ | 5x40 | 3,4x45 | 15 | 200 | 2000 |
| 62200b05050* | 62203x05050*▲ | 5x50 | 3,4x55 | 25 | 200 | 2000 |
| 62200b06040 | 62203x06040 | 6x40 | 3,8x45 | 10 | 200 | 2000 |
| 62200b06050 | 62203x06050 | 6x50 | 3,8x55 | 20 | 100 | 1000 |
| 62200b06060 | 62203x06060 | 6x60 | 3,8x65 | 30 | 100 | 1000 |
| 62200b06080 | 62203x06080 | 6x80 | 3,8x85 | 50 | 100 | 1000 |
| 62200b08060 | | 8x60 | 4,8x65 | 20 | 150 | 1500 |
| 62200b08080 | | 8x80 | 4,8x85 | 40 | 150 | 1500 |
| 62200b08100 | | 8x100 | 4,8x105 | 60 | 100 | 1000 |
| 62200b08120 | | 8x120 | 4,8x125 | 80 | 100 | 1000 |
| 62200b08140 | | 8x140 | 4,8x145 | 100 | 100 | 1000 |
| 62200b10080* | | 10x80 | 7x85 | 30 | 100 | 1000 |
| 62200b10100* | | 10x100 | 7x105 | 50 | 100 | 1000 |
| 62200b10135* | | 10x135 | 7x140 | 85 | 50 | 500 |
| 62200b10160* | | 10x160 | 7x165 | 110 | 50 | 500 |

* Sizes not covered by CE certification

**Double threaded screw**

| Code | Plug do x L mm | Screw d x Lv mm | Thread | Pkg. | Outer box |
|---|---|---|---|---|---|
| 62202b06040 | 6x40 | 3,8x52 | M6 | 200 | 2000 |
| 62202b06050▲ | 6x50 | 3,8x66 | M6 | 100 | 1000 |
| 62204b06040▲ | 6x40 | 3,8x52 | M7 | 100 | 1000 |
| 62204b06050▲ | 6x50 | 3,8x62 | M7 | 100 | 1000 |

▲ Quantity and delivery terms to be agreed

**VERSIONS:**
- **white zinc plated screw, grey plug**
- **stainless steel A2 screw, grey plug**
- **white zinc plated double threaded screw, grey plug**

**PRODUCT FEATURES:**
- **nylon plug**

**BASE MATERIALS:**

- ● concrete
- ● solid brick
- ◒ honeycomb brick
- ◒ cell like clay brick
- ◒ light weight honeycomb brick
- ◒ hollow dense aggregate block
- ◒ hollow light aggregate block
- ◒ aerated concrete
- ● solid stone

● suitable applications ◒ partially suitable applications

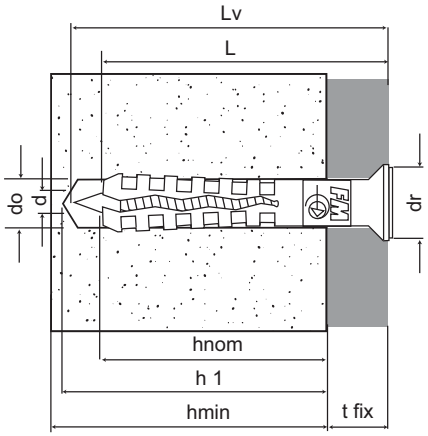


| | | | | | |
|---|---|---|---|---|---|
| d | = | screw diameter | hnom | = | nominal embedment depth |
| do | = | hole diameter | L | = | anchor length |
| dr | = | collar diameter | Lv | = | screw length |
| h1 | = | minimum hole depth | tfix | = | fixture thickness |
| hmin | = | minimum support thickness | | | |

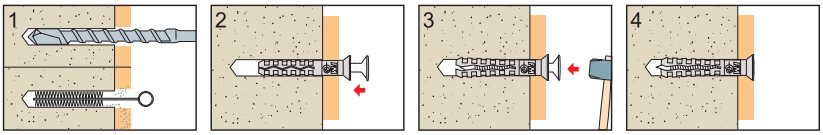


## DESIGN AND RECOMMENDED[1] LOADS

### Single anchor with large anchor spacing and edge distances

| Anchor | | | | Ø5 | Ø6 | Ø8 | Ø10 |
|---|---|---|---|---|---|---|---|
| **Minimum support thickness** | | $h_{min}$ | mm | 50 | 100 | 100 | 100 |
| **Minimum hole depth** | | $h_1$ | mm | 35 | 40 | 50 | 60 |
| **Nominal embedment depth** | | $h_{nom}$ | mm | 25 | 30 | 40 | 50 |
| **Hole diameter** | | $d_0$ | mm | 5 | 6 | 8 | 10 |
| **Concrete C20/C25** | Tensile | $N_{rd}$ | kN | 0,23 | 0,60 | 0,60 | 0,60 |
| | | N | kN | 0,15 | 0,40 | 0,40 | 0,40 |
| | Shear | $V_{rd}$ | kN | 0,60 | 0,60 | 1,20 | 1,65 |
| | | V | kN | 0,40 | 0,40 | 0,80 | 1,10 |
| **Solid brick** | Tensile | $N_{rd}$ | kN | 0,20 | 0,36 | 0,45 | 0,48 |
| | | N | kN | 0,13 | 0,24 | 0,30 | 0,32 |
| | Shear | $V_{rd}$ | kN | 0,60 | 0,60 | 1,20 | 1,65 |
| | | V | kN | 0,40 | 0,40 | 0,80 | 1,10 |
| **Spacing[2]** | | S | mm | 50 | 100 | 100 | 100 |
| **Edge distance[2]** | | C | mm | 50 | 100 | 100 | 100 |

1kN = 100 kgf

[1] The recommended loads derive from the mean ultimate loads and are inclusive of the total safety factor $\gamma$=6 (see Note).

[2] In case of broken bricks double the distances of the indicative data.

NOTE: Certified CE for ETICS ETAG014 following size Ø6-Ø8 on concrete, the recommended loads derive from the characteristic loads on the ETA 10/0190 certification and are inclusive of the partial safety factors $\gamma_f$ =1,5 e $\gamma_m$=2,0.

In the absence of CE markings, the recommended loads derive from tests carried out in the Friulsider laboratory in accordance with the appropriate standards.

The load values are only valid if the installation has been carried out correctly. The design engineer is responsible for the designing and calculation of the fixing.

# NAUTILUS COATING

## Characteristics:

- Corrosion resistance in Salt Spray: 1000 hours (red rust appearance)
- Thin (10μ): no interference on the threads
- Environmentally friendly: RoHS compliant and Chromium VI free
- Resistant to high temperatures

## Certifications:

- Salt Spray Test NSS according to UNI EN ISO 9227

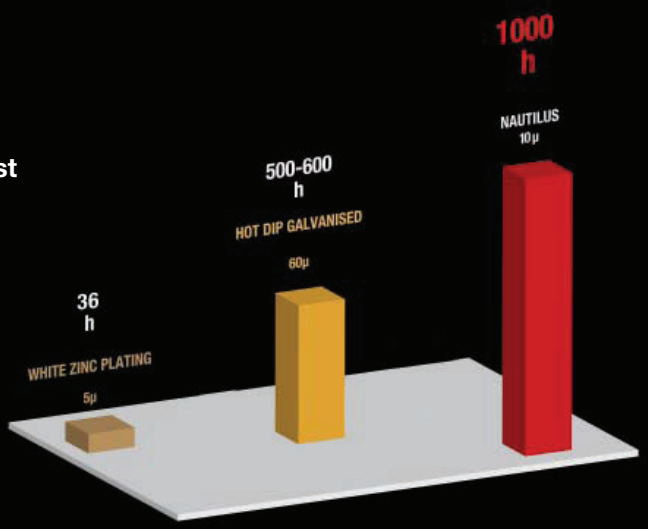


Corrosion resistance in Salt Spray.
Red rust appearance.

## Corrosivity categories according to ISO 9223

| CORROSIVITY CATEGORIES according to ISO 9223 | | | STEEL | STEEL | STAINLESS STEEL A4 (wr.1.4404 EN10088) |
|---|---|---|---|---|---|
| | | | White zinc ptd. 5μm ISO4042 | NAUTILUS | |
| C5-I | very high | Industrial | | | ◒ |
| C5-M | very high | Marine | | | ◒ |
| C4-I | high | Industrial | | | ● |
| C4-M | high | Marine | | ◒ | ● |
| C3 | medium | Industrial-Marine-Urban | | ● | ● |
| C2 | low | Urban | | ● | ● |
| C1 | very low | Rural | ◒ | ● | ● |

◒ Partially suitable applications ● Suitable applications

C5-I = Industrial environments with high air pollution (sulfur dioxide-chloride-etc.);
C5-M = Marine environment with very high salinity and very close to the sea <0.2 km;
C4-I = Industrial environment with high sulfur dioxide pollution, coastal areas with high salinity, distance from the sea 0,2-1 km;
C4-M = Coastal areas with high salinity, distance from the sea 0,2-1 km;
C3 = Urban or industrial environment with low sulfur dioxide pollution, coastal areas with moderate salinity, distance from the sea 1-3 km;
C2 = Urban environment contaminated mainly from densely populated areas with no significant industrial activity, distance from the sea > 3 km;
C1 = Rural non-contaminated environment, mainly natural areas, distance from the sea > 20 km.

**Environmental Assessment:** combinations of corrosivity categories according to ISO9223 - micro / localized specific environments - high temperatures - high UV radiation - galvanic corrosion due to contact with metals of different scales of nobility - direct or partial exposure to sea water including water spray - direction of the wind in the coastal or industrial area - presence of humidity / condensation > 80% - presence of corrosive vapours, (sulfides, chlorides, etc.) internal such as swimming pools / chemical plants or external such as proximity of industrial fumes discharges - rainfall frequency - underground structures - etc.

**THE ENVIRONMENTAL ASSESSMENT MUST BE CARRIED OUT BY DESIGNERS AND/OR COMPETENT PERSONAL, THE INFUENCE OF THE ABOVE FACTORS MUST BE CONSIDERED IN THE USE OF THE FIXINGS SHOWN IN THE TABLE, AND THEREFORE SUITABLE PROTECTIVE AND DESIGN-CONSTRUCTION FACTORS MUST BE IMPLEMENTED.**

All rights reserved.
The reproduction of photographs, designs, texts and illustrations is prohibited without Friulsider S.p.A. authorisation.
Colour images are purely indicative and may not correspond to the true chromaticity of the product.
Designs are indicative and illustrate the product use.
For correct installation consult the Friulsider technical sheets.
Friulsider S.p.A. is constantly engaged in product development and reserves the right to carry out technical modifications without prior notice.

**FRIULSIDER is a company associated with ECAP European Consortium of Anchors Producers**

http://www.ecap-sme.org/

**friulsider** SpA
via Trieste, 1 33048 San Giovanni al Natisone (UD) Italy
tel. +39 0432 747911 fax +39 0432 747994
info@friulsider.com www.friulsider.com

**friulsider** UK LTD
Unit 7 Celtic Trade Park
Bruce Road - Fforestfach
Swansea SA5 4HS
tel. 01792 561911 fax 01792 578702
sales@friulsider.co.uk www.friulsider.com

l0000spa01305
8 011546 342761
05/2013/1000

friulsider